A FAMILY COMPANY MANUFACTURING IN THE USA SINCE 1969

Glastender®

PRICE LIST 2027

Effective January 1, 2027



GLASSWASHERS | FOODSERVICE FABRICATION AND REFRIGERATION | BEER SYSTEMS

Terms and Conditions

Prices:
All prices are LIST. Applicable taxes will be added.

Quotations:
Unless otherwise stated, quotations are effective for 30 days only.

Acceptance:
All orders are subject to acceptance by Glastender, Inc.'s headquarters in Saginaw, Michigan. Possession of the Product Directory and Price List is not an offer to sell.

Shipments:
F.O.B. factory in Saginaw, Michigan. Freight terms are Third Party or Collect if shipped directly to you. Prepay and Add to Invoice freight terms are available upon request. The approximate shipping weights of all products are listed with the prices. Partial shipments will be made unless otherwise specified by the customer. Surface freight classifications are:

- GW24 Glasswashers - Class 175
- GT-18 Glasswashers - Class 175
- All Underbar Equipment - Class 175
- Bar Die Orders – Class 250
- Portable Bars - Class 175
- Remote refrigerators (i.e., no compressor) or dry storage back bar equipment - Class 175
- Self-contained refrigeration equipment - Class 150
- Ice Display Units (IDU and GDU) - Class 175
- Lighted Liquor Displays - Class 175
- Beer line chillers and beer towers (beverage dispensing equipment) - Class 175
- Bottle Disintegration System - Class 150
- Ice Cream Freezers - Class 125

All small items are evaluated to see the most cost effective means for shipment. Many small items ship via UPS or FedEx; however, when dimensional weight is excessive, LTL carriers are the most cost effective choice. Spare parts orders received before 1:00 PM EST can usually be shipped the same day.
The order department is happy to assist with routing or shipping questions.

Payment Terms:
Cash should be included with all orders unless credit terms have been arranged. To establish credit, banking and trade references are required. A convenient credit application is available upon request. Payment via credit card is not our normal means of receiving payment. Visa and MasterCard will be accepted, but must be charged at the time of shipment. In addition, a payment via credit card for orders totaling more than $500 will incur a 3% convenience fee on the total transaction amount.

Delivery:
The majority of equipment is manufactured to order and typically ships within three to six weeks after complete order information is received by the factory. In-stock equipment typically ships within two to three days of the factory receiving complete order information.

Returns:
Items specified as "Manufactured to Order" are NOT returnable.
A Return Authorization number must be issued by the factory in advance for any items that are returnable. The number MUST be noted on the outside of the returned package. Returns must be received within 90 days of the issue date. Shipping charges must be prepaid. A minimum 20% restocking charge will be applied to all authorized returns if received in new, unused condition in the original packaging.
The above conditions apply to spare part returns, except spare part returns must be received within 30 days of original shipment for electronic or electrical parts or within 90 days for all other parts.

Loss or Damage:
For customer routed shipments, Glastender, Inc. is not responsible for any loss, damage, or delay of merchandise during shipment. Such transit claims must be filed with the carrier. Merchandise must be examined on arrival. If shortages occur, Glastender, Inc. must be notified in writing within five (5) days of delivery to honor any shortage claim. Glastender will assume responsibility for freight claims on Prepay and Add shipments but the customer must inspect freight and note any damage upon receipt. Failure to do so may result in losses at the customer's expense.

Custom Orders:
Custom orders must be paid in advance and are not subject to cancellation.

Laminates:
Some products include common, readily available plastic laminates of the customer's selection. There may be an additional charge if uncommon varieties are ordered.

Glastender Freight Program

Program Conditions
Glastender, Inc. equipment pricing includes standard freight costs under the following conditions:

- Equipment order is for a minimum of $2,500, shipped to a single destination at the same time.
- Freight carrier is selected by Glastender, Inc. and may vary based on destination, transit times, performance history, customer service, or other factors.
- Shipping destination is within the continental United States and Canada. Non-continental or other international destinations are shipped to port of export.
- Combining equipment orders is allowed to reach the minimum order level if combined orders are shipped to the same destination at the same time.
- Equipment order terms of sale are FOB Saginaw MI / Freight Prepaid.
- Equipment returns are not covered.
- Parts orders do not qualify and will be charged shipping accordingly.

Customer Responsibilities
In addition to the program conditions listed above, the receiving customer must:

- Note all damage on the delivery receipt at the time of delivery.
- Open and inspect any items that look suspicious or raise concern, even if the carrier tells you it is not allowed.
- Refuse only the damaged items and keep the other items on the order.
- When in doubt, sign the delivery receipt as damaged.

The only way to hold the carrier liable is to sign the delivery as damaged.

Additional Fees
Additional carrier-related services and fees over and above standard freight costs are not covered. Such services and fees will be invoiced at the time of order or after the order has shipped. Examples of additional fees include the following:

Split shipment	Cost difference between single shipment and split shipment
Lift gate	$55 (Only available for items under 96″ in total packaged length)
Inside delivery	$100 per pallet/piece
Residential delivery	$100
Limited access site	$100
Expedited delivery	Difference from standard rate
Special delivery time	Carrier rate
Storage	Carrier rate
Re-delivery	Carrier rate
Re-consignment	Carrier rate
Other additional services not listed	Carrier rate

Questions
For questions regarding the Glastender Freight Program, please contact our sales department:

- 989.752.4275 or orders@glastender.com

12/16/2025

Table of Contents





Bottle Disintegration System ..... 1 - 2
Glasswashers ..... 3 - 6
• GW24 Rotary Glasswasher • GD24HT High Temp Glasswasher • GT-18 Series Rotary Rack Glasswashers
Pass-Thru Cocktail Stations ..... 7 - 12
• Assembly, Disassembly, and Complete Cocktail Stations

Cocktail Prep Cooler
page 96


CPC24

Craft Ice Mobile Freezer
page 44


FRM-2-C

Mixology Units
page 36

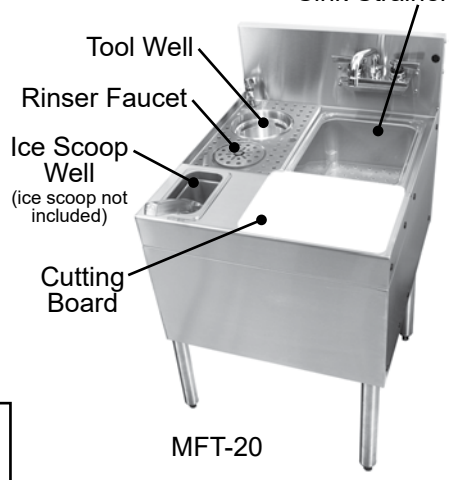

MFT-20






Bar Fabrication - Signature, Elevation, and Choice ..... 13 - 80
• Portable Bars • Ice Bins • Soda Gun Holders • Soda Manifold Housing • Bottle Wells and Racks
• Speed Rails • Blender Stations • Drainboards • Cabinets • Sinks • Drink Rails • Rinser Faucets
• Liquor Steps • Mixology Units, Stations, Wells and Drink Rails • Dry Waste Chutes and Rails
• Ice Cream & Craft Ice Freezers • All-In-One Stations • Tubing Chases • Beer Drainers • Modular Bar Die
Bar Refrigeration ..... 81 - 132
• Bar Profile Coolers • Direct Draw Draft Beverage Towers • Low Profile Coolers • High Profile Coolers
• Cocktail Prep Cooler • Reach-In Frosters • Slide Top Coolers • Slide Top Mug Frosters • Ice Display Units
• Lighted Liquor Displays • Dry Storage Cabinets • Back Bar Glass Storage • Back Bar Liquor Displays
Beverage Dispensing ..... 133 - 156
• Beer Line Chillers • Draft Beverage Towers
Kitchen Fabrication and Refrigeration ..... 157 - 163
• Hand Sinks • Drop-In Units • Lettuce Crispers
• Countertop Merchandisers • Wall-Mount Refrigerators • Drop-In Ice Cream Freezers
• Mobile Ice Baths • Specialty Ice Bins • Mobile Ice Bins • Wall Cabinets
Terms and Conditions ..... Inside front cover
Warranty ..... Inside back cover
Index ..... 164 - 165
Spec Sheets ..... specs.glastender.com

Bottle Disintegration

Increase your cash flow by decreasing your trash flow

Glastender's Bottle Disintegration System reduces the volume of glass bottle waste by as much as 85%, lowering your disposal fees and paying for itself over time. The BDS unit is easy to use and crushes a bottle in mere seconds, while being no louder than a standard blender.



Multi-level baffle system on feed chute for safe operation and glass containment

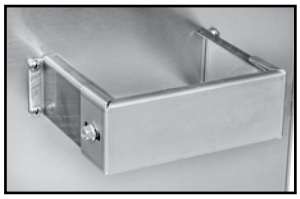

Bucket stop bar ensures bucket is fully seated when door is closed



Includes safety interlock switches

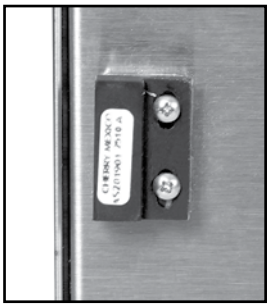

Closed door safety sensor prevents operation when front door is open



Bucket seating safety sensor prevents operation when the bucket is not in place

UP TO 85% VOLUME REDUCTION



From this to this

The 4-gallon bucket weighs approximately 43 pounds and holds approximately 4 cases of disintegrated long neck beer bottles when full

Glastender

Glastender, Inc. • 5400 North Michigan Road • Saginaw, MI • 48604-9780
800.748.0423 • 989.752.4275 • Fax 989.752.4444 • www.glastender.com



BDS

Product Information

(see BDS Spec Sheet for complete details)

Standard Features:

- Reduces volume of glass bottle waste by as much as 85%
- Disintegrates beer, wine, and liquor bottles up to 4″ in diameter and 14″ in height
- The 4-gallon bucket holds approximately 43 lbs. when full and is accessible for emptying by opening the front door (two buckets included)
- Compact design fits easily under the bar or in a service station
- It takes mere seconds to crush a bottle and is no louder than a standard blender
- Stainless steel interior and exterior resists corrosion and is easy to keep clean
- Includes safety interlock switches to ensure safe operation. The unit shuts down and a red indicator light is illuminated if the front access door is open or the bucket is not in place.
- Multi-level baffle system on feed chute and gasket seal to maximize glass containment
- Green indicator light identifies when unit is running
- Easy operation - simply turn it on and push a bottle down the feed chute
- Includes locking casters so unit can be easily moved for cleaning

BDS with door open showing access to bucket



BDS

Model	List	Weight	Width	Depth	Height
BDS	$8,765	185#	20″	22″	38″

Accessories

Model	Description	List	Weight
CE-BDS	Convert to 220V/50Hz or 220V/60Hz electrical	$821	185#
14000053	Bucket (additional)	$55	5#



14000053

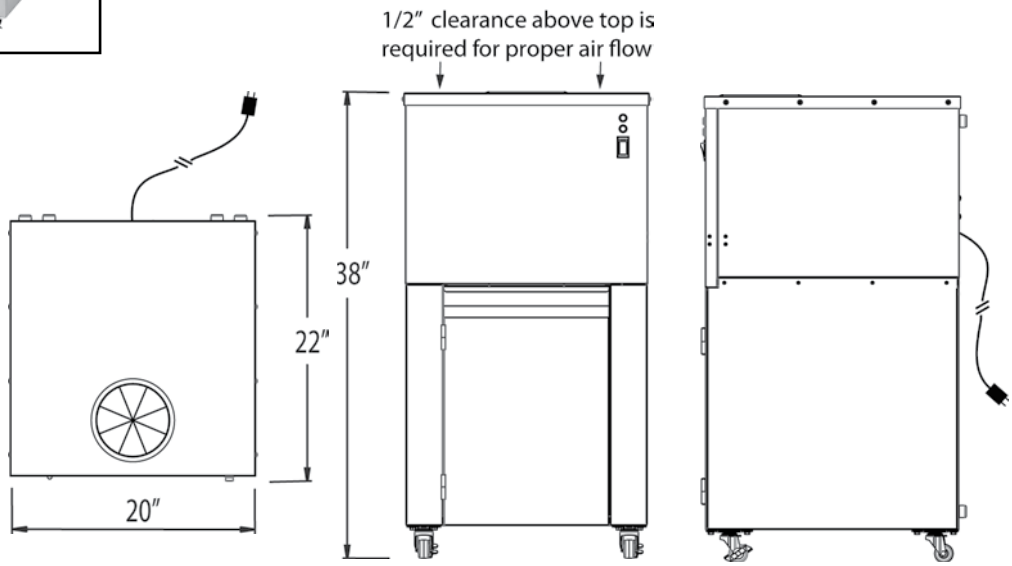

PLAN VIEW FRONT ELEVATION SIDE VIEW



GW24 shown with chemical bottles (not included)



GW24

Product Information

(see GW24 Spec Sheet for complete details)

24″ Rotary Glasswasher

Model	List	Weight	Length	Depth
GW24	$17,357	165#	24″	24″

Accessory
01001601
Rack Divider

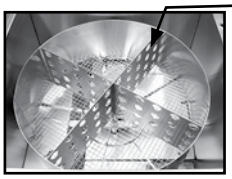



GW24 Accessories

Model	Description	List	Wgt
01001500	Slide-out Chemical Bottle Rack	$905	25#
01001564	Export transformer 220V/50Hz electrical NOTE: Eliminates side notch	$2,774	30#
CWET-GW	Clip-on wet waste	$531	10#
01001601	Rack divider, two-piece assembly	$317	7#
01001602	Backsplash, clip-on	$232	5#

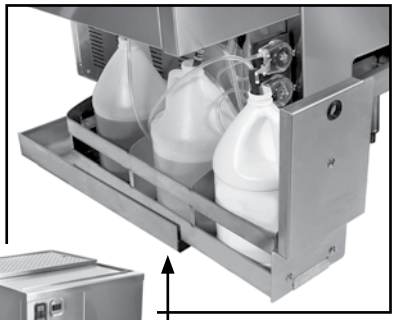



Accessory 01001500
Chemical Bottle Rack

Accessory
01001602 Backsplash

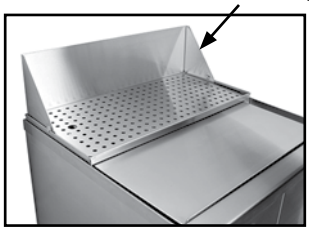



Accessory 01001564
Export transformer
220V/50Hz electrical

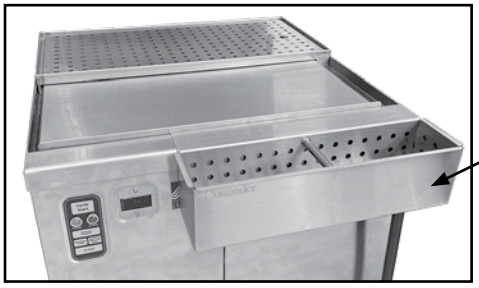

Accessory
CWET-GW

Glastender

Glastender, Inc. • 5400 North Michigan Road • Saginaw, MI • 48604-9780
800.748.0423 • 989.752.4275 • Fax 989.752.4444 • www.glastender.com



GD24HT



Product Information
(see GD24HT Spec Sheet for complete details)

GD24HT High Temp Glasswasher

Model	List	Weight	Length	Depth
GD24HT	$21,919	281#	24″	24″

The GD24HT includes:

- One (1) peg rack
- One (1) combination rack



01001754

GD24HT Accessories

Model	Description	List
01001754	Drain Water Tempering Kit	$761

There are ten different GT-18 models to choose from.

The top of every GT-18 glasswasher is removable. The same base, which houses all the electrical and mechanical components, is used with all of the different top styles. The various tops are used in different situations to increase glasswasher throughput. A suffix is added to the GT-18 model number to specify a top different than the standard door type. The different models are pictured below:



GT-18
Front load door type



GT-18+1
Front-to-back pass thru



Cocktail server view with simulated bar top and bar die



GT-18+1L
Front-to-side pass thru with left side drain table (GT-18+1R with right side drain table is also available)



GT-18+2
Side-to-side pass thru



GT-18+2-IC
Side-to-side corner pass thru

Product Information

(see GT-18, GT-18+1, GT-18+1L or R, GT-18+2, GT-18+2 Ext, GT-18+2-IC, and GT-18 Access Spec Sheets for complete details)

Standard Features:

- Drive wheel and glass rack lift out for cleaning
- Two 16″ diameter polypropylene racks included
- Spray box unlatches for easy cleaning and visual inspection - 15 spray nozzles have been engineered for maximum soil removal
- Digital temperature gauge built into switch panel
- Intelligent microprocessor control delays cycle start, up to two minutes, when incoming water is below 120ºF (49ºC)
- Automatic peristaltic metering pumps accurately dispense detergent, sanitizer and rinse aid
- Prime Switch for quick chemical priming
- 1/6 HP pump recirculates wash water and rinse water
- Fractional HP drive motor powers the belt driven rotary rack and includes built-in slip clutch

Electrical:

- 120V, single phase, 60Hz, 6-foot grounded cord and plug included

Capacity:

- 2 minute cycle, 70 second wash and 22 second rinse exposure
- 720 - 2-1/2″ diameter or 360 - 3-1/4″ diameter glasses per hour (maximum glass height 10″ - including pitchers and wine carafes)

Extended GT-18+2 Models

Extended GT-18+2 models have the drain table extended on one side of the glasswasher to hold more than one rack. This increases overall glasswasher throughput by allowing multiple racks of glassware to be pre-loaded for washing. The model number specifies the overall glasswasher length and the location of the extended drain table. For example, the GT-18+2-78L (pictured) is 78″ long overall and has the left side drain table extended. Extended +2's are available in 78″ and 90″ overall lengths. The 78″ models come with three racks and the 90″ models come with four racks. A leg set is included under the extended drain table.



GT-18+2-78L with 01000708 glass rack holder

Rotary Rack Glasswashers

Model	Description	List	Weight	Length	Drain Table
GT-18	Front load door type	$14,956	145#	18″	N/A
GT-18+1	Front-to-back pass thru	$16,116	155#	18″	Back
GT-18+1L	Front-to-side pass thru	$16,776	175#	36″	Left
GT-18+1R	Front-to-side pass thru	$16,776	175#	36″	Right
GT-18+2	Side-to-side pass thru	$17,562	195#	60″	Left & Right

Custom Rotary Rack Glasswashers*

Model	Description	List	Weight	Length	Drain Table
GT-18+2-IC	Side-to-side corner pass thru	$18,728	245#	42″ x 42″	Left & Right
GT-18+2-78L	Side-to-side pass thru, left extended	$18,550	275#	78″	Left & Right
GT-18+2-78R	Side-to-side pass thru, right extended	$18,550	275#	78″	Left & Right
GT-18+2-90L	Side-to-side pass thru, left extended	$19,211	300#	90″	Left & Right
GT-18+2-90R	Side-to-side pass thru, right extended	$19,211	300#	90″	Left & Right

*NOTE: These units are manufactured to order and are not returnable



GT-18 with 01000710 chemical rail

Accessories

Model	Description	List	Weight
01000532	Glass rack	$183	2#
01000533	Dish rack	$350	4#
01000536	Glass rack insert for stemware	$660	6#
01000710	Clip-on chemical rail	$497	10#
01000706	Glass rack holder (for GT-18+1 only)	$631	10#
01000708	Glass rack holder (+2, +1L, or +1R models)	$1,274	20#
01000709	Glass rack holder w/shelf (+2, +1L, or +1R models)	$1,597	25#
01000557	Export transformer†	$2,298	20#

See underbar section for wet waste sinks and drainboards.

†**Export Transformer**- The export transformer converts the electrical requirement to 220V, 1 phase, 50Hz.



01000536 Glass rack insert for stemware



01000533 Dish rack



GT-18+2 with SWA-12 wet waste sink and 01000709 glass rack holder



GT-18+1 with 01000706 glass rack holder



GT-18+2-78L with 01000708 glass rack holder

Cocktail Stations

Pass-thru cocktail stations are designed with the intention of increasing productivity through teamwork.

In a normal underbar lineup, the bartender is responsible for nearly all Cocktail Life Cycle steps.

Pass-thru cocktail stations are designed to include equipment and components necessary for the server to participate in more steps of the cocktail assembly and disassembly process.

With a teamwork approach, efficiency can be doubled relative to a typical underbar lineup.

Cocktail Cycle Prep Step	Responsibility (Standard)	Responsibility (Pass-Thru Station)
Select a Glass	Bartender	Shared
Add Ice	Bartender	Shared
Add Liquor	Bartender	Bartender
Add Mix	Bartender	Shared
Garnish Cocktail	Bartender	Shared
Complete the Sale	Bartender	Bartender
Dispose Dry Waste	Bartender	Shared
Dispose Wet Waste	Bartender	Shared
Return Used Glassware	Server	Server
Wash Glassware	Bartender	Shared



With dozens of configurations, pass-thru cocktail stations can accommodate assembly steps, disassembly steps, or both.

Glastender

Glastender, Inc. • 5400 North Michigan Road • Saginaw, MI • 48604-9780
800.748.0423 • 989.752.4275 • Fax 989.752.4444 • www.glastender.com



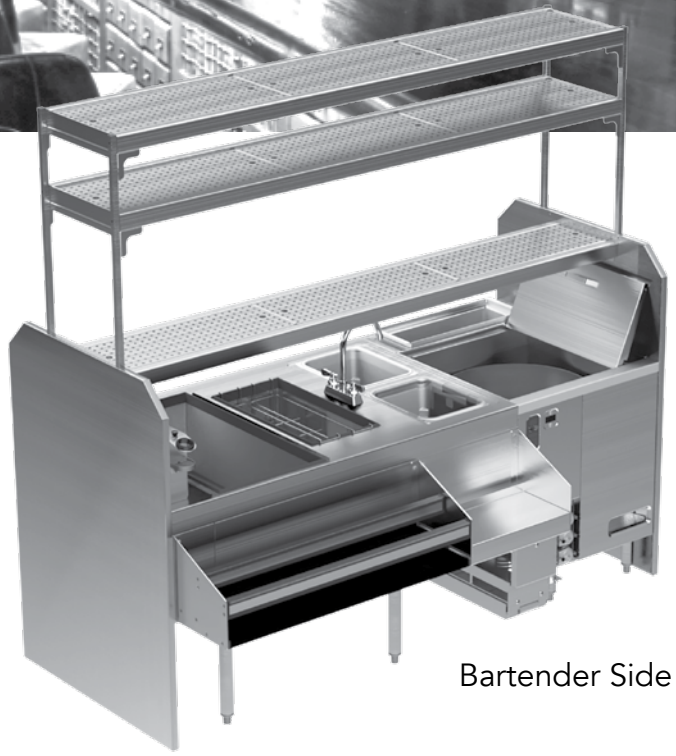

Bartender Side

Our pass-thru stations are constructed of durable, high-quality stainless steel. Cleaning takes minimal effort with all radius corners and easily removable parts.

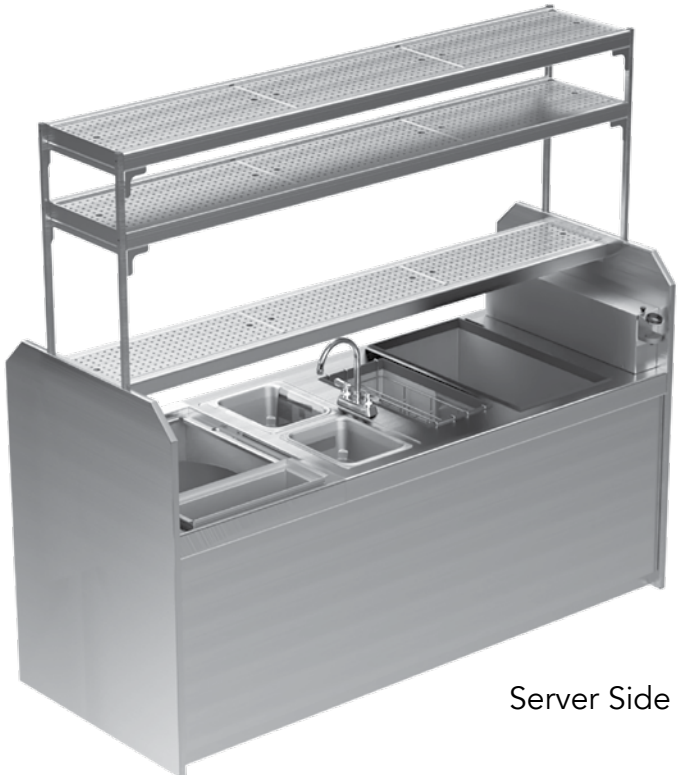

Server Side

Single and double overshelves are available as an accessory for convenient glassware storage.

Front and end finishing panels, available in stainless steel or a multitude of laminate options, give the pass-thru station a finished, cohesive look.

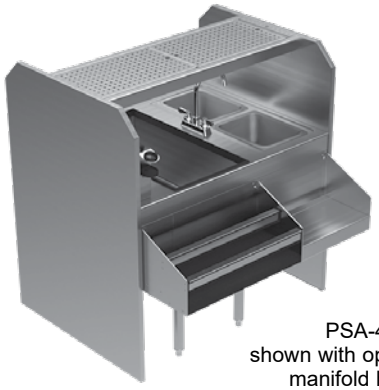

PSA-42R
shown with optional soda
manifold housing

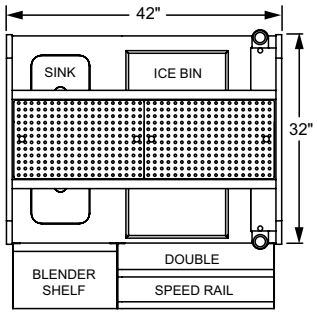

PSA-42L

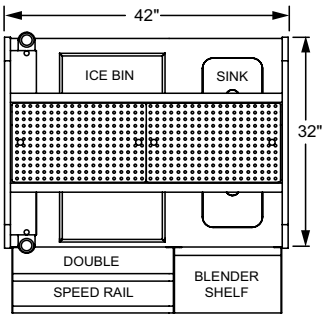

PSA-42R

PSA-42L & PSA-42R

(see PSA Spec Sheet for complete details)

The PSA-42L or R pass-thru assembly cocktail station includes the following standard features: two wet waste sinks (9-1/4″ by 10-1/2″ by 6″ deep) with strainers, gooseneck faucet, stainless steel draining tray shelf with removable perforated inserts, and one pass-thru ice bin (84 pound capacity).

Model	List	Weight	Blender Shelf/Double Speed Rail	Full Double Speed Rail	Full Single Speed Rail	Laminate Wood Panels
PSA-42L or R	$13,324	345#	$1,062	$808	$411	$2,035

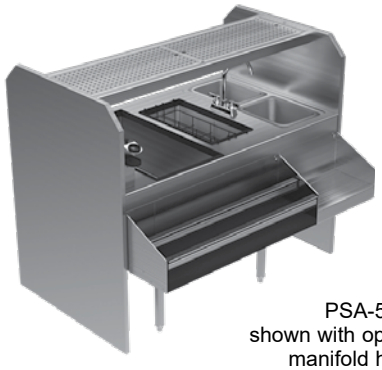

PSA-54R
shown with optional soda
manifold housing

Plan Views

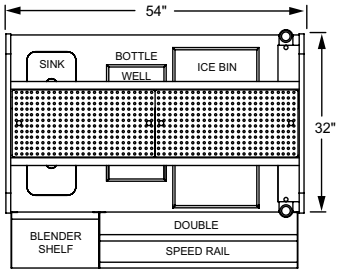

PSA-54L

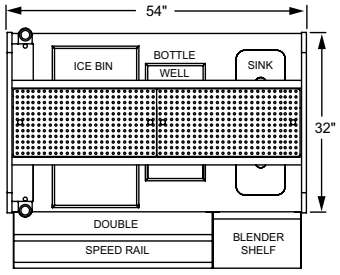

PSA-54R

PSA-54L & PSA-54R

The PSA-54L or R pass-thru assembly cocktail stations include the following standard features: two wet waste sinks (9-1/4″ by 10-1/2″ by 6″ deep) with strainers, gooseneck faucet, stainless steel draining tray shelf with removable perforated inserts, one pass-thru ice bin (84 pound capacity), and eight bottle insulated storage well.

Model	List	Weight	Blender Shelf/Double Speed Rail	Full Double Speed Rail	Full Single Speed Rail	Laminate Wood Panels
PSA-54L or R	$16,664	395#	$1,171	$1,160	$644	$2,804

*NOTE: Cocktail Stations are manufactured to order and are not returnable

Glastender

Glastender, Inc. • 5400 North Michigan Road • Saginaw, MI • 48604-9780
800.748.0423 • 989.752.4275 • Fax 989.752.4444 • www.glastender.com

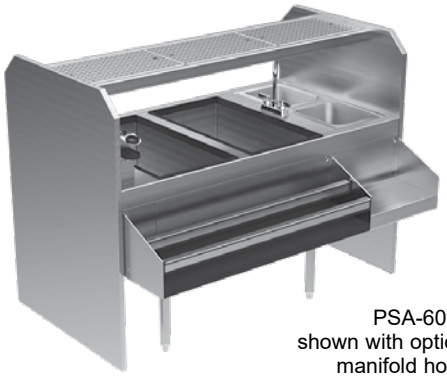

PSA-60R
shown with optional soda
manifold housing

Plan View

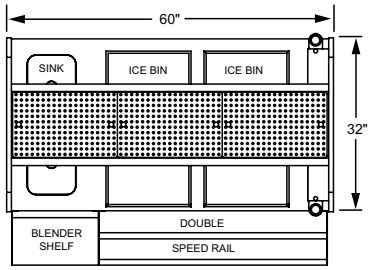

PSA-60L

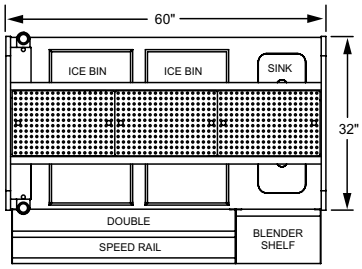

PSA-60R

PSA-60L & PSA-60R

(see PSA Spec Sheet for complete details)

The PSA-60L/R pass-thru assembly cocktail station includes the following standard features: two wet waste sinks (9-1/4″ by 10-1/2″ by 6″ deep) with strainers, gooseneck faucet, stainless steel draining tray shelf with removable perforated inserts, and two pass-thru ice bins (84 pound capacity each).

Model	List	Weight	Blender Shelf/Double Speed Rail	Full Double Speed Rail	Full Single Speed Rail	Laminate Wood Panels
PSA-60L/R	$17,107	435#	$1,226	$1,201	$675	$2,804



PSD-42R

Plan View

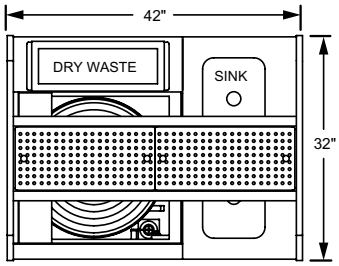

PSD-42L

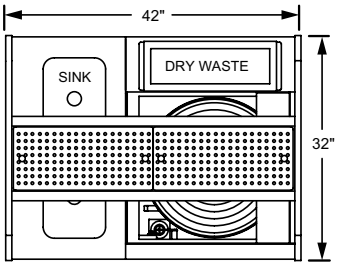

PSD-42R

PSD-42L & PSD-42R

(see PSD Spec Sheet for complete details)

The PSD-42L/R pass-thru disassembly cocktail station includes the following standard features: two wet waste sinks (9-1/4″ by 11-1/2″ by 6″ deep) with strainers, gooseneck faucet, server-side removable stainless steel dry waste receptacle (5 gallon capacity), stainless steel draining tray shelf with removable perforated inserts, and GW24 glasswasher with bi-fold cover.

Model	List	Weight	Laminate Wood Panels
PSD-42L/R	$28,500	540#	$2,035

*NOTE: Cocktail Stations are manufactured to order and are not returnable

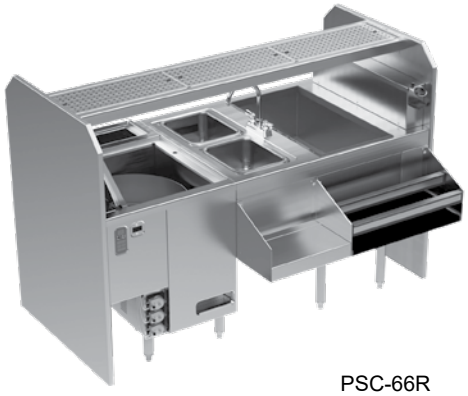

PSC-66R

Plan View

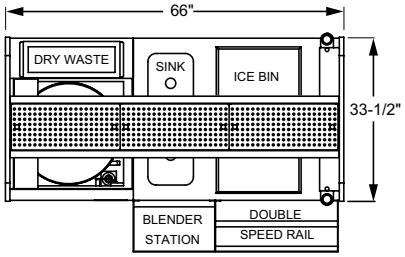

PSC-66L

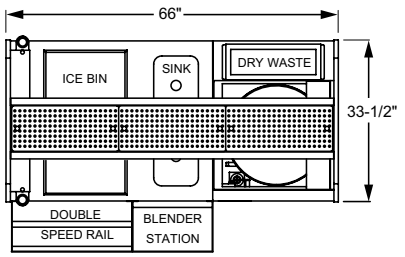

PSC-66R

PSC-66L & PSC-66R

(see PSC Spec Sheet for complete details)

The PSC-66L/R pass-thru complete cocktail station includes the following standard features: pass thru ice bin (84lb capacity), two wet waste waste sinks (9-1/4″ by 11-1/2″ by 6″ deep bowls) with sink strainers, gooseneck faucet, server-side removable stainless steel dry waste receptacle (5 gallon capacity), stainless steel draining tray shelf with removable perforated inserts, and GW24 glasswasher with bi-fold cover.

Model	List	Weight	Blender Shelf/Double Speed Rail	Full Double Speed Rail	Full Single Speed Rail	Laminate Wood Panels
PSC-66L/R	$33,739	570#	$1,062	$808	$411	$2,804

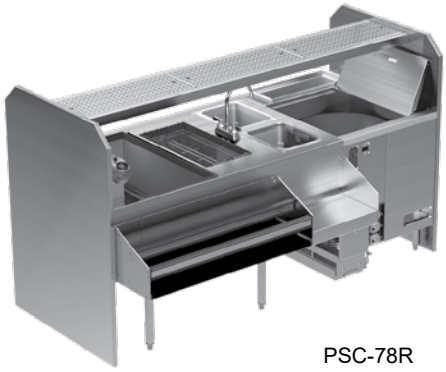

PSC-78R

Plan View

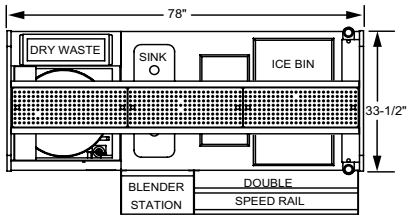

PSC-78L

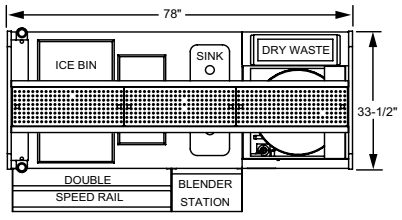

PSC-78R

PSC-78L & PSC-78R

The PSC-78L/R pass-thru complete cocktail station includes the following standard features: pass thru ice bin (84lb capacity), two wet waste waste sinks (9-1/4″ by 11-1/2″ by 6″ deep bowls) with sink strainers, gooseneck faucet, server-side removable stainless steel dry waste receptacle (5 gallon capacity), stainless steel draining tray shelf with removable perforated inserts, GW24 glasswasher with bi-fold cover, and eight bottle insulated storage well

Model	List	Weight	Blender Shelf/Double Speed Rail	Full Double Speed Rail	Full Single Speed Rail	Laminate Wood Panels
PSC-78L/R	$36,600	750#	$1,171	$1,160	$644	$2,804

*NOTE: Cocktail Stations are manufactured to order and are not returnable

Glastender

Glastender, Inc. • 5400 North Michigan Road • Saginaw, MI • 48604-9780
800.748.0423 • 989.752.4275 • Fax 989.752.4444 • www.glastender.com

Accessories

Model	Description	List	Weight	PSA-42	PSA-54	PSA-60	PSD-42	PSC-66	PSC-78
Overshelves (Mounts to end panels of station - brackets included)									
SOS/SS-42	42″ stainless steel single overshelf	$1,977	53#	x			x		
SOS/SS-54	54″ stainless steel single overshelf	$2,112	68#		x				
SOS/SS-60	60″ stainless steel single overshelf	$2,257	75#			x			
SOS/SS-66	66″ stainless steel single overshelf	$2,325	83#					x	
SOS/SS-78	78″ stainless steel single overshelf	$2,455	98#						x
DOS/SS-42	42″ stainless steel double overshelf	$3,023	98#	x			x		
DOS/SS-54	54″ stainless steel double overshelf	$3,296	126#		x				
DOS/SS-60	60″ stainless steel double overshelf	$3,584	140#			x			
DOS/SS-66	66″ stainless steel double overshelf	$3,722	154#					x	
DOS/SS-78	78″ stainless steel double overshelf	$3,982	182#						x
Clip-on Garnish Dispenser (Clips to tray shelf on bartender or server side)									
CCD/T	Garnish dispenser, clip-on to tray shelf	$312	4#	x	x	x		x	x
Ice Bin Accessories									
03000509	Sneeze guard for 32″ deep stations	$422	15#	x	x	x		x	x
IBD-H-CS32	Ice bin divider, half, for 32″ deep station	$197	4#	x	x	x		x	x
02006635	Sliding cover	$304	12#	x	x	x		x	x
Clip-on Dry Waste Receptacle (Clips to front panel on cocktail server side of station)									
CDRY	Clip-on dry waste (stainless steel)	$959	30#	x	x	x			
Soda Gun Accommodations									
02001103	Ten circuit cold plate	$2,458	120#	x	x	x		x	x
	Soda manifold	$856	21#	x	x	x		x	x
GW24 Rotary Glasswasher Accessories									
01001500	Slide-out Chemical Bottle Rack	$905	25#				x	x	x
01001601	Rack divider, two-piece assembly	$317	7#				x	x	x

All faucets are certified low lead compliant

⚠**WARNING:** The plastic wet waste strainer included with this product can expose you to chemicals including Bisphenol A (BPA), which is known to the State of California to cause birth defects or other reproductive harm. For more information, go to www.P65Warnings.ca.gov. **Warning applies to State of California only.** Part #03000483

*NOTE: Cocktail Stations are manufactured to order and are not returnable



PBC48-12

Portable bars for stackable cups come with a cup storage well for three rows up to 4-1/4″ in diameter, as well as a cocktail ice bin and an iced beverage storage bin. The size of the cocktail bin and beverage storage bin vary depending on the model ordered.



PBG72-12

Portable bars for glassware come with a glass storage work surface area consisting of a pan with perforated insert and rack slides for storing three 20″x20″ glass racks below. They also include a cocktail ice bin and an iced beverage storage bin, the sizes of which vary depending on the model ordered.

*NOTE: Portable bars are made to order and are not returnable.

Portable Bar For Stackable Cups

Model	List	Cocktail Ice Bin	Beverage Bin	Wt	Overall Length
PBC48-12	$12,647	12″	24″	275#	48″
PBC48-18	$12,747	18″	18″	275#	48″
PBC54-12	$13,442	12″	30″	300#	54″
PBC54-18	$13,544	18″	24″	300#	54″
PBC60-12	$14,257	12″	36″	325#	60″
PBC60-18	$14,338	18″	30″	325#	60″

Product Information

(see PBC, PBCR, PBG, and PBGR Spec Sheets for complete details)

Standard Features:

- Weather resistant stainless steel construction
- Stainless steel bottle rail with PVC plastic sound deadening cover. Rail includes clear snap-on liquor identification label cover.
- PBC and PBCR - Cup storage well for three rows up to 4-1/4″ in diameter
- PBG and PBGR - Glass storage pan with perforated insert and storage for three glass racks below
- Cocktail ice bin with sliding cover and garnish cup area. Rear garnish area has hinged stainless steel sanitary cover with three (12″) or four (18″) cups.
- Iced beverage storage bin with separate drain to prevent contamination of ice used to make cocktails. Drain includes flexible hose and on/off valve for draining when convenient.
- Foamed-in-place insulation and an PVC plastic breaker strip around ice bin liners to prevent thermal transfer from outside the ice bin so ice lasts longer
- 6-gallon plastic drain tank with on-off valve to collect melting ice water from cocktail bin
- 4″ heavy-duty rubberized casters. The two bartender side corner casters are locking.
- Stainless steel front and side panels are welded to the 16-gauge stainless steel base for incredible durability
- Stainless steel bar top and front and side panels have a plastic honeycomb core for durability and sound deadening
- Stylish feathered jewel finish on bar top hides scratches

Portable Bar For Glassware

Model	List	Cocktail Ice Bin	Beverage Bin	Wt	Overall Length
PBG66-12	$15,574	12″	24″	355#	66″
PBG66-18	$15,673	18″	18″	355#	66″
PBG72-12	$16,395	12″	30″	380#	72″
PBG72-18	$16,494	18″	24″	380#	72″
PBG78-12	$17,214	12″	36″	405#	78″
PBG78-18	$17,314	18″	30″	405#	78″

Glastender

Glastender, Inc. • 5400 North Michigan Road • Saginaw, MI • 48604-9780
800.748.0423 • 989.752.4275 • Fax 989.752.4444 • www.glastender.com



PBCR72-12

Portable Bar For Stackable Cups With Space For Refrigerator

Model	List	Cocktail Ice Bin	Beverage Bin	Wt	Overall Length
PBCR72-12	$15,655	12″	12″	340#	72″
PBCR78-12	$16,457	12″	18″	365#	78″
PBCR78-18	$16,556	18″	12″	365#	78″
PBCR84-12	$17,276	12″	24″	390#	84″
PBCR84-18	$17,373	18″	18″	390#	84″
PBCR90-12	$18,074	12″	30″	415#	90″
PBCR90-18	$18,170	18″	24″	415#	90″
PBCR96-12	$18,867	12″	36″	440#	96″
PBCR96-18	$18,966	18″	30″	440#	96″

Portable bars for stackable cups with space for a refrigerator share the same features as the other stackable cups models, except they also include a 36″w by 25″d by 38-3/4″h space for an on-board refrigerator. The refrigerator must be ordered separately. A Glastender model C1FB36 (page 71) or ST36 (Page 113) is recommended. If a non-Glastender refrigerator is being used, verify the power cord can exit the front of the 36″ opening.

RIGHT SIDE ELEVATION
FOR ALL PORTABLE BARS

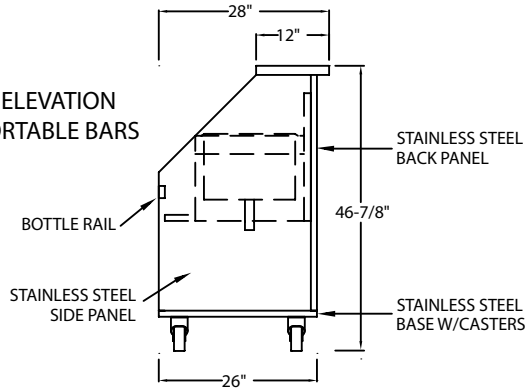



PBGR96-18



PBGR96-18
with C1FB36 installed

Portable Bar For Glassware With Space For Refrigerator

Model	List	Cocktail Ice Bin	Beverage Bin	Wt	Overall Length
PBGR90-12	$18,226	12″	12″	415#	90″
PBGR96-12	$19,046	12″	18″	440#	96″
PBGR96-18	$19,142	18″	12″	440#	96″

Portable bars for glassware with space for a refrigerator share the same features as the other glassware models, except they also include a 36″w by 25″d by 38-3/4″h space for an on-board refrigerator. The refrigerator must be ordered separately. A Glastender model C1FB36 (page 71) or ST36 (Page 113) is recommended. If a non-Glastender refrigerator is being used, verify the power cord can exit the front of the 36″ opening.

*NOTE: Portable bars are made to order and are not returnable.



IBA-24-CP10

Product Information

(see IB and IB-ED Spec Sheets for complete details)

Standard Features

- One-piece, seamless top and backsplash
- PVC plastic breaker strip around ice bin liner: creates 5/16″ raised edge around liner (NSF® requirement is 3/16″), acts as a thermal barrier to prevent heat transfer, and makes the covers slide easier
- Tubing chase available centered in backsplash of 12″ and larger models. Specify accessory model #TC-BS.
- 24″ deep version provides a larger ice bin, not just a deck extension on the back of 19″ deep model
- Sliding stainless steel cover
- Foamed-in-place insulation
- Models without cold plates have a 1-1/2″ welded tailpiece - no drain fitting to break or come loose
- 10-1/2″ deep liner (Extra deep models have a 14-1/2″ deep liner)
- Adjustable stainless steel bullet feet

What is a cold plate?

A cold plate is an aluminum block with stainless steel lines or circuits molded within. Glastender ice bins can be manufactured with a ten-circuit cold plate built into the bottom liner. Soda lines are attached by the soda vendor to the input and output lines of the cold plate and the soda water and syrup is chilled as it passes through these lines. Please consult your soda vendor to determine if cold plates are required in your ice bins.

19″ Deep Ice Bins*

Model	List	Length	Weight	Ice Capacity
IBA-6†	$1,488	6″	40#	17#
IBA-12	$2,106	12″	50#	33#
IBA-18	$2,378	18″	60#	50#
IBA-24	$2,656	24″	70#	67#
IBA-30	$2,933	30″	80#	84#
IBA-36	$3,250	36″	90#	100#
IBA-42	$3,535	42″	100#	117#
IBA-48	$3,817	48″	110#	134#
19″ Deep Extra Deep Ice Bins*				
IBA-18-ED	$2,693	18″	75#	69#
IBA-24-ED	$2,998	24″	80#	92#
IBA-30-ED	$3,308	30″	90#	116#
IBA-36-ED	$3,657	36″	100#	139#
IBA-42-ED	$3,969	42″	110#	162#
IBA-48-ED	$4,282	48″	125#	185#
With 10-Circuit Cold Plate				
IBA-24-CP10	$4,708	24″	130#	67#
IBA-30-CP10	$5,070	30″	145#	84#
IBA-36-CP10	$5,544	36″	160#	100#
IBA-42-CP10	$6,271	42″	170#	117#
IBA-48-CP10	$6,553	48″	180#	134#
19″ Extra Deep Ice Bins With 10-Circuit Cold Plate*				
IBA-24-CP10-ED	$5,262	24″	140#	92#
IBA-30-CP10-ED	$5,669	30″	155#	116#
IBA-36-CP10-ED	$6,261	36″	170#	139#
IBA-42-CP10-ED	$6,974	42″	180#	162#
IBA-48-CP10-ED	$7,317	48″	190#	185#

† Not freestanding

24″ Deep Ice Bins*

Model	List	Length	Weight	Ice Capacity
IBB-6†	$1,613	6″	45#	21#
IBB-12	$2,277	12″	55#	42#
IBB-18	$2,595	18″	70#	64#
IBB-24	$2,956	24″	80#	85#
IBB-30	$3,240	30″	95#	106#
IBB-36	$3,584	36″	110#	127#
IBB-42	$3,925	42″	120#	149#
IBB-48	$4,239	48″	130#	170#
With 10-Circuit Cold Plate*				
IBB-24-CP10	$4,964	24″	145#	85#
IBB-30-CP10	$5,883	30″	160#	106#
IBB-36-CP10	$6,266	36″	170#	127#
IBB-42-CP10	$6,634	42″	185#	149#
IBB-48-CP10	$6,975	48″	195#	170#
24″ Extra Deep Ice Bins With 10-Circuit Cold Plate*				
IBB-24-CP10-ED	$5,444	24″	155#	117#
IBB-30-CP10-ED	$6,416	30″	170#	147#
IBB-36-CP10-ED	$6,834	36″	180#	176#
IBB-42-CP10-ED	$7,246	42″	195#	205#
IBB-48-CP10-ED	$7,625	48″	205#	235#

† Not freestanding

*NOTE: These ice bin models are manufactured to order and are not returnable

Glastender®

Glastender, Inc. • 5400 North Michigan Road • Saginaw, MI • 48604-9780
800.748.0423 • 989.752.4275 • Fax 989.752.4444 • www.glastender.com

Pass-Thru Ice Bins

Model	List	Cold Plate	Weight	Ice Capacity
IB-38X24*	$4,808	N/A	100#	175#
IB-38X24-CP10	$6,914	10 circuit	190#	175#

A 24″ wide by 38″ deep pass-thru ice bin is used to provide the cocktail servers with access to the ice. Pass-thru ice bins have the same features as standard ice bins, except there is no backsplash and the sliding cover is double sided. The bartender side of the ice bin lines up with the underbar equipment the same as a standard ice bin. The 38″ deep dimension also allows a pass-thru ice bin to line up with back-to-back mounted underbar equipment (see sample drawings).

*NOTE: This model is manufactured to order and is not returnable

Product Information

(see IB-38x24 Spec Sheet for complete details)



IB-38X24

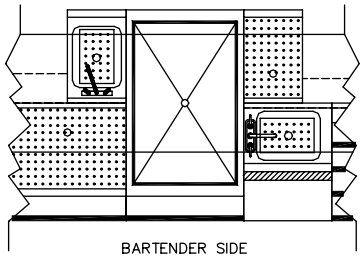

Underbar Plan View with Pass-Thru Ice Bin and Back-to-Back Mounted Underbar

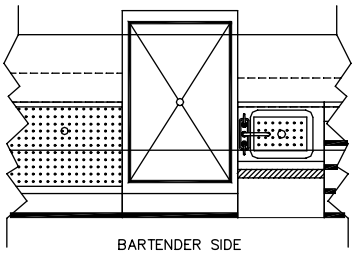

Underbar Plan View with Pass-Thru Ice Bin

Accessories

Model	Description	List	Weight
TC-BS	Tubing chase centered in backsplash (12″ wide and larger models only)	$84	N/A
IMF	Ice-melting faucet (12″ wide and larger models only)	$723	3#
SSR-12	12″ single speed rail	$275	4#
SSR-18	18″ single speed rail	$302	6#
SSR-24	24″ single speed rail	$331	7#
SSR-30	30″ single speed rail	$357	10#
SSR-36	36″ single speed rail	$384	12#
SSR-42	42″ single speed rail	$411	18#
SSR-48	48″ single speed rail	$441	22#
DSR-12	12″ double speed rail	$545	8#
DSR-18	18″ double speed rail	$598	12#
DSR-24	24″ double speed rail	$644	14#
DSR-30	30″ double speed rail	$699	20#
DSR-36	36″ double speed rail	$753	24#
DSR-42	42″ double speed rail	$808	36#
DSR-48	48″ double speed rail	$869	44#
CCD	Garnish dispenser	$253	5#
CCD6-12	Garnish dispenser, ice chilled, includes six cups and two lift off covers, for IBA-12 or well of CBA model	$580	8#
IBD-H-A	Ice bin divider, half, for 19″ deep ice bin	$124	4#
IBD-H-B	Ice bin divider, half, for 24″ deep ice bin	$158	4#
IBD-H-A-ED	Ice bin divider, half, for 19″ deep extra deep ice bin	$145	4#
IBD-H-B-ED	Ice bin divider, half, for 24″ deep extra deep ice bin	$185	4#
IBD-H-P	Ice bin divider, half, for IB-38X24	$206	4#
IBD-H-P-CP	Ice bin divider, half, for IB-38X24-CP10	$222	4#
IBD-H-P-LR	Ice bin divider, half, left to right for IB-38X24	$158	4#



SSR-24



DSR-24



CCD6-12

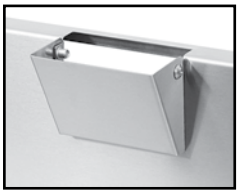

TC-BS



IBD-H-A



CCD

NOTE: For Bottle Wells or Racks see page 21

Combo Ice Bins combine separate draining ice bin and bottle well compartments into one integral unit. The bottle well may be located on the left, right, or both sides of the ice bin.



CBA-36R-CP10
with SSR-36 and bottle
rack accessories

*NOTE: These Combo Ice Bin models are manufactured to order and are not returnable

Product Information

(see CB and CB-ED Spec Sheets for complete details)

Standard Features

- One-piece, seamless top and backsplash
- PVC plastic breaker strip around ice bin liner: creates 5/16″ raised edge around liner (NSF® requirement is 3/16″), acts as thermal barrier to prevent heat transfer, and makes the covers slide easier
- Tubing chase available centered in backsplash of 12″ and larger models. Specify accessory model #TC-BS.
- 24″ deep version provides a larger ice bin, not just a deck extension on the back of 19″ deep model
- Sliding stainless steel cover
- Foamed-in-place insulation
- Models without cold plates have a 1-1/2″ welded tailpiece - no drain fitting to break or come loose
- 10-1/2″ deep liner (Extra deep models have a 14-1/2″ deep liner)
- Adjustable stainless steel bullet feet

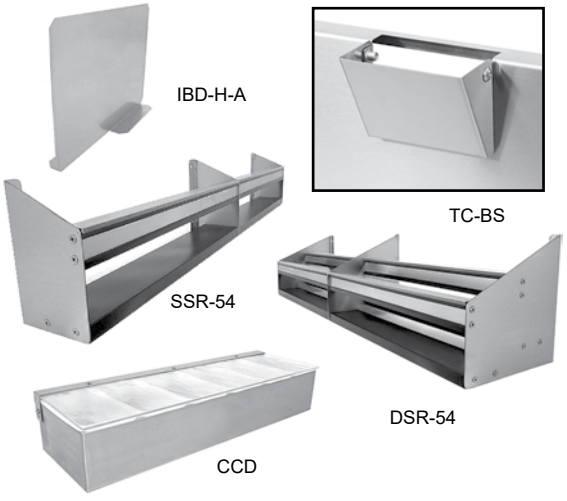

19″ Deep Combo Ice Bins*

Model	List	Length	Wt	Ice Capacity	Bottles Stored
CBA-30L3 or R3	$3,664	30″	90#	67#	3
CBA-30L or R	$3,664	30″	90#	50#	6
CBA-36L or R	$3,955	36″	100#	67#	6
CBA-42	$4,687	42″	110#	50#	12
CBA-42L or R	$4,238	42″	110#	84#	6
CBA-48	$5,012	48″	120#	67#	12
CBA-48L or R	$4,572	48″	120#	100#	6
With 10-Circuit Cold Plate					
CBA-30L3 or R3-CP10	$6,033	30″	165#	67#	3
CBA-36L or R-CP10	$6,321	36″	170#	67#	6
CBA-42L or R-CP10	$6,696	42″	180#	84#	6
CBA-48-CP10	$7,505	48″	200#	67#	12
CBA-48L or R-CP10	$7,207	48″	200#	100#	6
CBA-54-CP10*	$7,889	54″	210#	84#	12
CBA-60-CP10*	$8,399	60″	220#	100#	12
19″ Extra Deep Combo Ice Bins With 10-Circuit Cold Plate*					
CBA-30L3 or R3-CP10-ED	$6,493	30″	175#	92#	3
CBA-36L or R-CP10-ED	$6,782	36″	180#	92#	6
CBA-42L or R-CP10-ED	$7,190	42″	190#	116#	6
CBA-48-CP10-ED	$8,045	48″	210#	92#	12
CBA-48L or R-CP10-ED	$7,732	48″	210#	139#	6
24″ Deep Combo Ice Bins With 10-Circuit Cold Plate*					
CBB-30L4 or R4-CP10	$6,766	30″	175#	85#	4
CBB-36L or R-CP10	$7,105	36″	180#	85#	8
CBB-42L or R-CP10	$7,407	42″	190#	106#	8
CBB-48-CP10	$8,626	48″	210#	85#	16
CBB-48L or R-CP10	$7,710	48″	210#	127#	8

Combo Ice Bin Accessories

Model	Description	List	Wgt
BR3	3-bottle rack	$116 ea.	3#
BR4	4-bottle rack	$141 ea.	4#
BRM15	Mixology bottle rack	$411	3#
CCD	Garnish dispenser	$253	5#
CCD6-12	Ice-chilled garnish dispenser	$580	8#
TC-BS	Tubing chase centered in backsplash	$84	N/A
IMF	Ice-melting faucet	$723	3#
SSR-30	30″ single speed rail	$357	10#
SSR-36	36″ single speed rail	$384	12#
SSR-42	42″ single speed rail	$411	18#
SSR-48	48″ single speed rail	$441	22#
SSR-54	54″ single speed rail	$644	25#
SSR-60	60″ single speed rail	$675	28#
DSR-30	30″ double speed rail	$699	20#
DSR-36	36″ double speed rail	$753	24#
DSR-42	42″ double speed rail	$808	36#
DSR-48	48″ double speed rail	$869	44#
DSR-54	54″ double speed rail	$1,160	50#
DSR-60	60″ double speed rail	$1,201	56#
IBD-H-A	Ice bin divider, half, for 19″ deep ice bin	$124	4#
IBD-H-B	Ice bin divider, half, for 24″ deep ice bin	$158	4#
IBD-H-A-ED	Extra deep ice bin divider, half, for 19″ deep ice bin	$145	4#
IBD-H-B-ED	Extra deep ice bin divider, half, for 24″ deep ice bin	$185	4#



CBA-36-CP10-CS
with bottle rack accessories



Large chase behind each bottle well provides access for soda and liquor lines.

Casino Style Combo Ice Bin*

Model	List	Length	Wt	Ice Capacity	Bottles Stored
CBA-36-CP10-CS	$7,905	36″	190#	67#	6

*NOTE: Casino Style Combo Ice Bin model is manufactured to order and not returnable

Casino Style Combo Ice Bin Accessory

Model	Description	List	Weight
BR3	3-bottle rack	$116ea.	3#
CCD	Garnish dispenser	$253	5#

Product Information

(see Casino Spec Sheet for complete details)

Standard Features

- Integrates one ice bin, two separate draining bottle wells, and two tubing chases into a one-piece seamless top and backsplash
- All stainless steel construction
- PVC plastic breaker strip around ice bin liner: creates 5/16″ raised edge around liner, acts as thermal barrier to prevent heat transfer, and makes the cover slide easier
- One 3-bottle well to the left and right of the main ice bin liner
- 4″ by 4-1/2″ chase opening located behind each bottle well
- 24″ single speed rail with PVC sound deadening cover included
- Sliding stainless steel cover for main ice bin liner
- Adjustable stainless steel bullet feet
- Ten circuit cold plate standard in main ice bin liner

Patented. For more information visit: https://www.glastender.com/patents



SHA-4



SHB-4



SHA-6

Product Information

(see SH Spec Sheet for complete details)

Standard Features

- All stainless steel construction
- Designed to house the manifold of Wunder-Bar® or Schroeder America™ 8 to 14 button soda guns
- Includes integral drip pan with radius corners for easy cleaning
- Built-in holder for soda gun
- Top cover is removable for access to the soda manifold
- Allows you to dictate the soda gun location
- Eliminates the need for tubing bundles above the work surface
- Designed to mount to at least one other piece of underbar equipment (there is no provision for leg mounting)
- Includes camlock in backsplash for mounting to adjacent underbar
- Extra deep "-ED" models available to align with extra-deep style ice bins

*NOTE: These items are manufactured to order and are not returnable

19″ Deep Soda Gun Holders

Model	List	Length	Weight
SHA-4	$954	4″	22#
SHA-4-ED	$1,013	4″	24#
SHA-6	$996	6″	25#
SHA-6-ED	$1,064	6″	27#

24″ Deep Soda Gun Holders

Model	List	Length	Weight
SHB-4	$1,011	4″	22#
SHB-4-ED*	$1,082	4″	24#
SHB-6	$1,056	6″	25#
SHB-6-ED*	$1,136	6″	27#

38″ Deep Pass Thru Soda Gun Holders

Model	List	Length	Weight
SHP-4*	$1,524	4″	32#
SHP-4-ED*	$1,627	4″	34#
SHP-6*	$1,614	6″	35#
SHP-6-ED*	$1,724	6″	37#

Soda Manifold Housings



SMHA-4

Installation photo showing soda gun drip cup mounted below bar top (soda gun and drip cup not included)

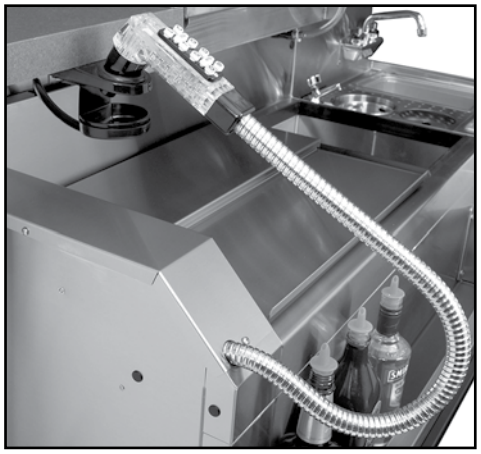

Product Information

(see SMH Spec Sheet for complete details)

Standard Features

- Stainless steel construction
- Designed to house the manifold of Wunder-Bar® or Schroeder America™ 8 to 14 button soda guns
- Once installed, the top of the housing is 34″ high
- Top cover is removable for access to the soda manifold
- Eliminates the need for tubing bundles above the work surface
- Mounts to an adjacent piece of underbar (there is no provision for leg mounting)
- The soda gun drip cup supplied by the soda gun manufacturer mounts to the underside of your bar top
- Extra deep "-ED" models available to align with extra-deep style ice bins

19″ Deep Soda Manifold Housing

Model	List	Length	Weight
SMHA-4	$703	4″	20#
SMHA-4-ED*	$749	4″	22#
SMHA-6*	$750	6″	23#
SMHA-6-ED*	$801	6″	25#

24″ Deep Soda Manifold Housing

Model	List	Length	Weight
SMHB-4*	$770	4″	24#
SMHB-4-ED*	$829	4″	26#
SMHB-6*	$824	6″	28#
SMHB-6-ED*	$885	6″	30#

38″ Deep Pass Thru Manifold Housing

Model	List	Length	Weight
SMHP-4*	$1,136	4″	35#
SMHP-4-ED*	$1,229	4″	37#
SMHP-6*	$1,217	6″	40#
SMHP-6-ED*	$1,317	6″	42#

*NOTE: These items are manufactured to order and are not returnable

Pricing effective January 1, 2027

Undercounter Mount Gun Holder



UMGH

Product Information

(see UMGH Spec Sheet for complete details)



14 gauge stainless steel with rubber grommet and plastic drip pan. Grommet is specially sized to properly hold both Wunder-Bar® and Schroeder America™ style soda guns. Includes 10′ of drain line tube.

Undercounter Mount Gun Holder

Model	List	Weight
UMGH	$181	3#

Product Information

(see BW Spec Sheet for complete details)

Bottle Wells are PVC plastic-molded bottle holders that are placed in an ice bin to hold ice-chilled mix-ingredient pour and store bottles. There are two sizes of wells: 3 bottle for 19″ deep ice bins and four bottle for 24″ deep ice bins. The 3 bottle notched model is used with the IB-38x24 pass-thru ice bin.

A bottle well may be placed on one or both sides of an ice bin and is designed with a special ledge on one side to hold a sliding ice bin cover. When bottle wells are ordered with an original ice bin, the correct, smaller-sliding ice bin cover is automatically provided.

For three bottles stored on one side of a 19″ deep ice bin, order one model number BW3. For three bottles stored on both sides of a 19″ deep ice bin, order a quantity of two BW3.

For four bottles stored on one side of a 24″ deep ice bin, order one model number BW4. For four bottles stored on both sides of a 24″ deep ice bin, order a quantity of two BW4.



BW3
(Positioned Left)



BW3
(Positioned Right)

Model	Description	List	Weight
BW3	3 bottle well for 19″ deep ice bin	$84	4#
BW3-2	2 - 3 bottle wells for 19″ deep ice bin	$168	8#
BW3-N	3 bottle well with notch for IB-38x24 ice bin	$128	4#
BW4	4 bottle well for 24″ deep ice bin	$154	5#
BW4-2	2 - 4 bottle wells for 24″ deep ice bin	$308	10#

Bottle Racks

Pricing effective January 1, 2026

BR3 and BR4 Product Information

(see BR Spec Sheet for complete details)

BR3 and BR4 bottle racks are vinyl-coated wire racks that are placed in an ice bin to hold ice-chilled mix-ingredient pour and store bottles. There are two sizes of wire racks: 3 bottle for 19″ deep ice bins and four bottle for 24″ deep ice bins.

The BR3 and BR4 are intended for use with smaller ice bins, where the sole purpose of the ice bin is to provide insulated storage for pour and store bottles. Bottle racks are most often used with 6″ or 12″ wide ice bins, which hold one or two racks, respectively. For example, an IBA-6 ice bin holds one BR3, while an IBA-12 ice bin holds two BR3.

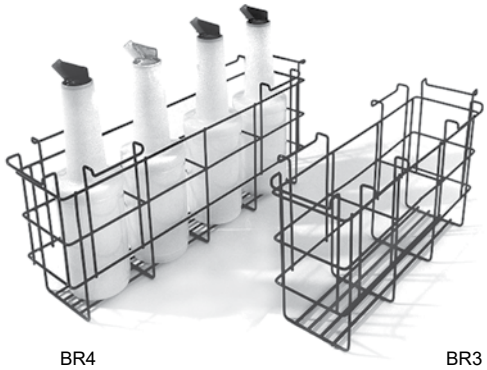

BR4
(Bottles not included)

BR3

Model	Description	List	Weight
BR3	3 bottle rack for 19″ deep ice bin	$116	3#
BR4	4 bottle rack for 24″ deep ice bin	$141	4#

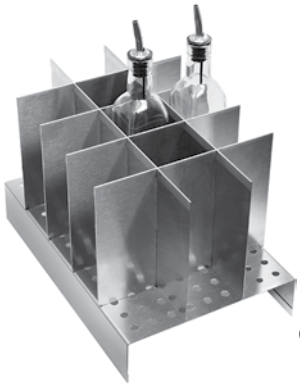

BRM15
(Bottles not included)

BRM15 Product Information

(see BRM Spec Sheet for complete details)

The BRM15 stainless steel mixology bottle rack fits into an IBA-12 model ice bin or the bottle well of a CBA model combo ice bin to provide ice-chilled storage for 15 elixir bottles. NOTE: Recommend Tablecraft 916 (16 oz.) or 9085 (8.5 oz.) olive oil bottles.

Model	Description	List	Weight
BRM15	Mixology bottle rack, 15 bottle, 3″ by 3″ openings	$411	3#



SSR-24

Single Speed Rails

Model	List	Length	Weight
SSR-12	$275	12″	4#
SSR-13 to 18	$302	13″ to 18″	6#
SSR-19 to 24	$331	19″ to 24″	7#
SSR-25 to 30	$357	25″ to 30″	10#
SSR-31 to 36	$384	31″ to 36″	12#
SSR-37 to 42	$411	37″ to 42″	18#
SSR-43 to 48	$441	43″ to 48″	22#
SSR-49 to 54	$644	49″ to 54″	25#
SSR-55 to 60	$675	55″ to 60″	28#
SSR-61 to 66	$703	61″ to 66″	32#
SSR-67 to 72	$729	67″ to 72″	35#
SSR-73 to 78	$758	73″ to 78″	38#
SSR-79 to 84	$787	79″ to 84″	42#



DSR-54



DSR-24

Double Speed Rails

Model	List	Length	Weight
DSR-12	$545	12″	8#
DSR-13 to 18	$598	13″ to 18″	12#
DSR-19 to 24	$644	19″ to 24″	14#
DSR-25 to 30	$699	25″ to 30″	20#
DSR-31 to 36	$753	31″ to 36″	24#
DSR-37 to 42	$808	37″ to 42″	36#
DSR-43 to 48	$869	43″ to 48″	44#
DSR-49 to 54	$1,160	49″ to 54″	50#
DSR-55 to 60	$1,201	55″ to 60″	56#
DSR-61 to 66	$1,267	61″ to 66″	64#
DSR-67 to 72	$1,320	67″ to 72″	70#
DSR-73 to 78	$1,374	73″ to 78″	76#
DSR-79 to 84	$1,427	79″ to 84″	84#



CSR-24-SR

Locking covers for Single Speed Rails include built-in storage hangers when ordered with original equipment



Single Speed Rail Locking Covers

Model	List	Length	Weight
SSRC-12	$363	12″	7#
SSRC-13 to 18	$391	13″ to 18″	9#
SSRC-19 to 24	$419	19″ to 24″	11#
SSRC-25 to 30	$452	25″ to 30″	13#
SSRC-31 to 36	$474	31″ to 36″	16#
SSRC-37 to 42	$500	37″ to 42″	18#
SSRC-43 to 48	$529	43″ to 48″	21#

Double Speed Rail Locking Covers

Model	List	Length	Weight
DSRC-12	$726	12″	14#
DSRC-13 to 18	$782	13″ to 18″	18#
DSRC-19 to 24	$838	19″ to 24″	22#
DSRC-25 to 30	$905	25″ to 30″	26#
DSRC-31 to 36	$948	31″ to 36″	32#
DSRC-37 to 42	$1,000	37″ to 42″	36#
DSRC-43 to 48	$1,059	43″ to 48″	42#

Product Information

(see SSR, CSR, and DSR Spec Sheets for complete details)

Standard Features

- All stainless steel construction
- Open channel-and-rail design for easy cleaning and better view of bottles
- PVC sound deadening covers
- Locking covers for Single Speed Rails include built-in storage hangers when ordered with original equipment
- Each rail includes a clear lift-off liquor-identification cover
- Radius corners for easy cleaning

Clip-on Single Speed Rails

Model	Description	List	Weight
CSR-12-SR	12″ Clip-on single to existing single	$319	4#
CSR-18-SR	18″ Clip-on single to existing single	$348	6#
CSR-24-SR	24″ Clip-on single to existing single	$378	7#
CSR-30-SR	30″ Clip-on single to existing single	$406	10#
CSR-36-SR	36″ Clip-on single to existing single	$435	12#
CSR-42-SR	42″ Clip-on single to existing single	$463	15#
CSR-48-SR	48″ Clip-on single to existing single	$492	18#

All faucets are certified low lead compliant

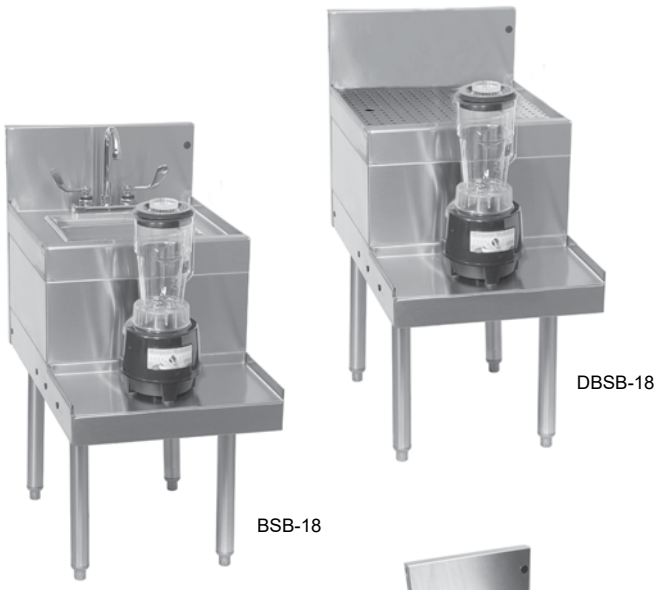

DBSB-18

BSB-18

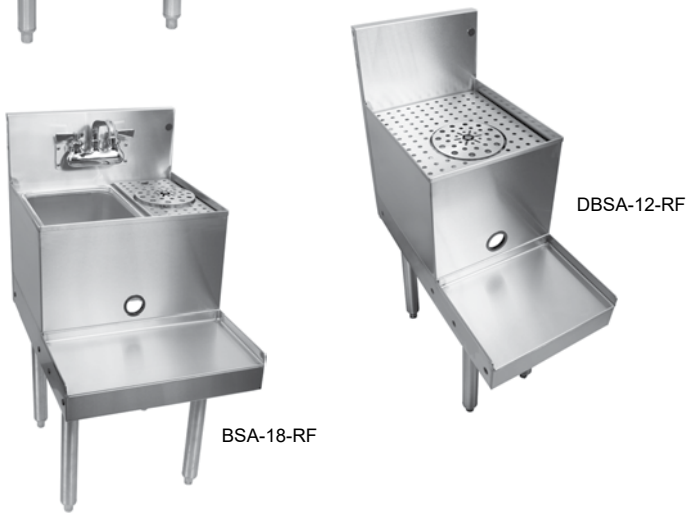

DBSA-12-RF

BSA-18-RF

Rinser faucet installation notes:

- Important: Unit must be installed in conformance with applicable federal, state, and local plumbing codes, including adequate backflow when required.
- Must install backflow prevention device conforming to ANSI/ASSE 1022 or ANSI/ASSE 1024 to meet plumbing code (not included).
- Install in-line water regulator (included).
- A separate shut-off valve is recommended (not included).

Blender stations cannot have a speed rail mounted to them. Since speed rails are so common on underbar, blender stations come in 24″ and 29″ depths and are designed to align with underbar that has a speed rail.

⚠**WARNING:** The plastic wet waste strainer included with this product can expose you to chemicals including Bisphenol A (BPA), which is known to the State of California to cause birth defects or other reproductive harm. For more information, go to www.P65Warnings.ca.gov. **Warning applies to State of California only.** Part #03000483

Blender Stations come standard with a sink, faucet, and wet waste strainer. Drainboard Blender Stations come standard with a drainboard work surface consisting of a drain pan with separate removable perforated insert. The integral blender shelf is 9″ deep on the 24″ deep models and 10″ deep on 29″ models. The shelf stores the blender at the 19″ high level. A grommeted cord access hole is provided in the front skirt.

24″ Deep Blender Stations

(Aligns with 19″ deep underbar that has a single speed rail)

Model	List	Length	Weight
BSA-12	$2,541	12″	48#
BSA-14	$2,513	14″	50#
BSA-18L †*	$2,615	18″	55#
BSA-18R †*	$2,615	18″	55#

† Denotes faucet location as Left or Right

24″ Deep Blender Station with Rinser Faucet

(Aligns with 19″ deep underbar that has a single speed rail)

Model	List	Length	Weight
BSA-18-RF*	$3,319	18″	60#

29″ Deep Blender Stations

(Aligns with 24″ deep underbar that has a single speed rail or 19″ deep underbar that has a double speed rail)

Model	List	Length	Weight
BSB-12*	$2,713	12″	53#
BSB-14*	$2,796	14″	55#
BSB-18*	$2,942	18″	60#

24″ Deep Drainboard Blender Stations

(Aligns with 19″ deep underbar that has a single speed rail)

Model	List	Length	Weight
DBSA-12*	$1,674	12″	40#
DBSA-14*	$1,716	14″	42#
DBSA-18*	$1,758	18″	45#
DBSA-24*	$1,912	24″	55#

24″ Deep Drainboard Blender Stations with Rinser Faucet

(Aligns with 19″ deep underbar that has a single speed rail)

Model	List	Length	Weight
DBSA-12-RF*	$2,209	12″	45#
DBSA-14-RF*	$2,265	14″	47#
DBSA-18-RF*	$2,364	18″	50#

29″ Deep Drainboard Blender Stations

(Aligns with 24″ deep underbar that has a single speed rail or 19″ deep underbar that has a double speed rail)

Model	List	Length	Weight
DBSB-12*	$1,691	12″	45#
DBSB-14*	$1,734	14″	47#
DBSB-18*	$1,840	18″	50#

*NOTE: These items are manufactured to order and are not returnable

Product Information

(see BS and DBS Spec Sheets for complete details)

Standard Features

- All stainless steel construction
- Adjustable stainless steel bullet feet
- Sink models feature a 9-1/4″ by 11-1/2″ by 6″ deep sink bowl, a lift-out plastic perforated sink strainer and a hot and cold water faucet
- Drainboard models feature drainboard work surface consisting of drain pan with separate removable perforated insert
- "-RF" models include a rinser faucet for rinsing blender cups
- 24″ deep models have a 9″ deep shelf
- 29″ deep models have a 10″ deep shelf
- Junction box for duplex outlet mounted underneath blender shelf (outlet not included)

Optional foot-operated faucets



Configurable Options

Model	Description	List	Wt
LS15-F	15″ D left side splash (BSA models)	$197	4#
RS15-F	15″ D right side splash (BSA models)	$197	4#
LS15-D	15″ D left side splash (DBSA models)	$197	4#
RS15-D	15″ D right side splash (DBSA models)	$197	4#
LSA-D	19″ deep left side splash (BSB & DBSB models)	$197	4#
RSA-D	19″ deep right side splash (BSB & DBSB models)	$197	4#
LSRF	Left side splash (-RF models)	$197	4#
RSRF	Right side splash (-RF models)	$197	4#
FOF-B	Convert to foot-operated backsplash faucet for BSA-12, BSA-18-RF, and BSB-12 models	$725	3#
FOF-D	Convert to foot-operated deck faucet for BSA-14, BSA-18L, BSA-18R, BSB-14, and BSB-18 models	$553	3#

Accessory

Model	Description	List	Wt
TR	Towel ring	$26	1#



TR



BBS-12

Additional blender shelf space can be added to standard underbar units by specifying a Bolt-on Blender Shelf. Bolt-on Blender Shelves are 10″ deep and include a junction box for duplex outlet (outlet not included) mounted below the shelf.

Bolt-on Blender Shelves

Model	Description	List	Wt
BBS-8	8″ bolt-on blender shelf	$375	8#
BBS-12	12″ bolt-on blender shelf	$394	12#
BBS-14	14″ bolt-on blender shelf	$402	14#
BBS-16	16″ bolt-on blender shelf	$418	16#
BBS-18	18″ bolt-on blender shelf	$428	18#
BBS-24	24″ bolt-on blender shelf	$464	28#
BBS-30	30″ bolt-on blender shelf	$493	36#



DBA-18 with optional SSR-18

The work surface of a Glastender drainboard consists of a 1″ deep sloped stainless steel drain pan with a separate removable perforated insert. The 1″ high perforated insert allows air circulation beneath the glassware, and since the pan is sloped and not the insert, all glassware is stored on a level plane.

NOTE: Drainboards are also available with a flat stainless steel fillerboard top in lieu of the drainboard top. Substitute an 'F' for the 'D' in the model number when ordering and use the same price. Fillerboards are manufactured to order and are not returnable.

Product Information

(see DB Spec Sheet for complete details)

Standard Features

- All stainless steel construction
- Adjustable stainless steel bullet feet
- 24″ deep models provide a larger drainboard storage area, not just a deck extension on the back of the 19″ deep model
- One-piece seamless top, front rail and backsplash
- Work surface consists of a drain pan and separate perforated insert for better air circulation
- All storage is on level plane

19″ Deep Drainboards

Model	List	Length	Weight
DBA-12	$1,260	12″	45#
DBA-18	$1,400	18″	50#
DBA-24	$1,550	24″	55#
DBA-30	$1,700	30″	60#
DBA-36	$1,830	36″	65#
DBA-42*	$1,967	42″	70#
DBA-48*	$2,106	48″	75#

24″ Deep Drainboards

Model	List	Length	Weight
DBB-12	$1,370	12″	50#
DBB-18	$1,542	18″	55#
DBB-24	$1,712	24″	60#
DBB-30	$1,886	30″	65#
DBB-36*	$2,034	36″	70#
DBB-42*	$2,198	42″	80#
DBB-48*	$2,363	48″	85#

*NOTE: These items are manufactured to order and are not returnable

Accessories

Model	Description	List	Weight
SSR-12	12″ single speed rail	$275	4#
SSR-18	18″ single speed rail	$302	6#
SSR-24	24″ single speed rail	$331	7#
SSR-30	30″ single speed rail	$357	10#
SSR-36	36″ single speed rail	$384	12#
SSR-42	42″ single speed rail	$411	18#
SSR-48	48″ single speed rail	$441	22#
DSR-12	12″ double speed rail	$545	8#
DSR-18	18″ double speed rail	$598	12#
DSR-24	24″ double speed rail	$644	14#
DSR-30	30″ double speed rail	$699	20#
DSR-36	36″ double speed rail	$753	24#
DSR-42	42″ double speed rail	$808	36#
DSR-48	48″ double speed rail	$869	44#



DSR-24



SSR-24

Glastender

Glastender, Inc. • 5400 North Michigan Road • Saginaw, MI • 48604-9780
800.748.0423 • 989.752.4275 • Fax 989.752.4444 • www.glastender.com

Recessed drainboards have the same drain pan with separate perforated insert design as normal drainboards, except the work surface has been lowered to allow stacking of glassware. A perforated shelf is placed on top of the first level of glassware and a second layer of glassware is stacked on top of it. Recessed drainboards work best when only one style of glassware is being stored.

Recessed drainboards cannot have a speed rail mounted to them. Since speed rails are so common on underbar, recessed drainboards have been designed to align with underbar that has a speed rail. The four different recessed drainboard styles are based on the four different equipment-mounting situations.

Product Information

(see RDB Spec Sheet for complete details)

Standard Features

- All stainless steel construction
- Adjustable stainless steel bullet feet
- One-piece seamless top, front rail and backsplash
- Work surface consists of a drain pan and separate perforated insert for better air circulation
- Lift-out stainless steel perforated shelf for stacking glassware
- Specially designed side profiles to align with four different equipment-mounting situations



RDBA-18S



RDBB-18 with
DHSB-12 attached left

24″ Deep Recessed Drainboards

(Aligns with 19″ deep underbar that has a single speed rail)

Model	List	Length	Weight
RDBA-12S	$1,500	12″	50#
RDBA-18S	$1,692	18″	55#
RDBA-24S	$1,902	24″	60#
RDBA-30S	$2,095	30″	65#

24″ Deep Recessed Drainboards

(Aligns with 24″ deep underbar that has no speed rail)

Model	List	Length	Weight
RDBB-12	$1,500	12″	50#
RDBB-18	$1,692	18″	55#
RDBB-24	$1,902	24″	60#
RDBB-30	$2,095	30″	65#



RDBA-18D

*NOTE: Recessed Drainboards are manufactured to order and are not returnable



RDBB-18S

29″ Deep Recessed Drainboards*

(Aligns with 19″ deep underbar that has a double speed rail)

Model	List	Length	Weight
RDBA-12D	$1,662	12″	60#
RDBA-18D	$1,880	18″	65#
RDBA-24D	$2,138	24″	70#
RDBA-30D	$2,356	30″	75#

29″ Deep Recessed Drainboards*

(Aligns with 24″ deep underbar that has a single speed rail)

Model	List	Length	Weight
RDBB-12S	$1,662	12″	60#
RDBB-18S	$1,880	18″	65#
RDBB-24S	$2,138	24″	70#
RDBB-30S	$2,356	30″	75#

Corner Inside Rectangle Drainboards

Pricing effective January 1, 2027

Corner drainboards are used when an underbar line-up turns, either 90° or less. The direction of the turn may be toward or away from the bartender. A turn that is toward the bartender requires an inside corner. A turn that is away from the bartender requires an outside corner. Corner drainboards are constructed using the same drain pan with separate removable perforated-insert design as all Glastender drainboards.

Product Information

(see CIR Spec Sheet for complete details)

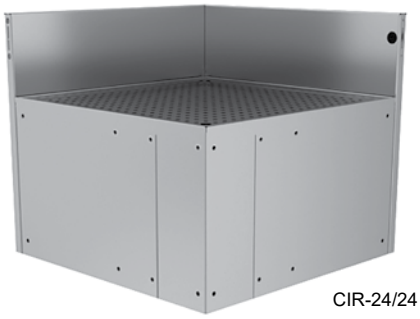

CIR-24/24

*NOTE: These items are manufactured to order and are not returnable

Corner Inside Rectangle Drainboards are for 90° inside turns only. The dimensions of the corner are specified in the model number. If the dimensions of each side are not the same, the longest dimension is specified second along with its location.

Corner drainboards are designed to mount between two pieces of underbar. However, corner drainboards can be used to mount between any two stable vertical surfaces. Corners should not be mounted to objects that are mobile or on casters.

Because they are intended to mount between two vertical surfaces, corner drainboards do not come with legs. If one side of the corner does not have a vertical surface on which to mount, then a leg set must be ordered as an accessory.

PLAN VIEWS

CIR-24/24

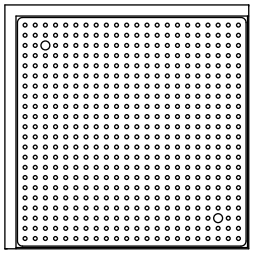

CIR-24/24-N

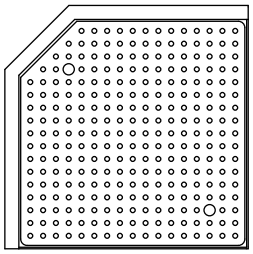

CIR-24/24-LN

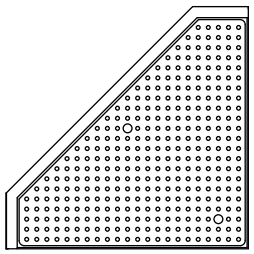

Corner Inside Rectangle Drainboards

Model	List	Left	Right	Weight
CIR-19/19*	$1,360	19″	19″	40#
CIR-19/24L	$1,451	24″	19″	45#
CIR-19/24R	$1,451	19″	24″	45#
CIR-19/30L*	$1,558	30″	19″	50#
CIR-19/30R*	$1,558	19″	30″	50#
CIR-24/24	$1,555	24″	24″	50#
CIR-24/30L	$1,682	30″	24″	60#
CIR-24/30R	$1,682	24″	30″	60#

Corner Inside Rectangle Drainboards With Chamfered Back Corner

Model	List	Left	Right	Weight
CIR-19/19-N*	$1,409	19″	19″	40#
CIR-24/24-N*	$1,605	24″	24″	50#
CIR-24/24-LN*	$1,659	24″	24″	50#

Corner Inside and Outside L Shape Drainboards*

Pricing effective January 1, 2027

Product Information

(see CILB and COLB Spec Sheets for complete details)



CILB COLB

Corner Inside & Outside L Shape Drainboards*

Model	List	Depth	Turn	Weight
CILB	$2,002	24″	Inside	50#
COLB	$2,010	24″	Outside	60#
CILB-LN	$2,018	24″	Inside	50#
COLB-LN	$1,902	24″	Outside	55#

Corner Inside and Outside L Shape Drainboards are for 90° inside or outside turns. They are designed to align with 24″ deep underbar.

PLAN VIEWS

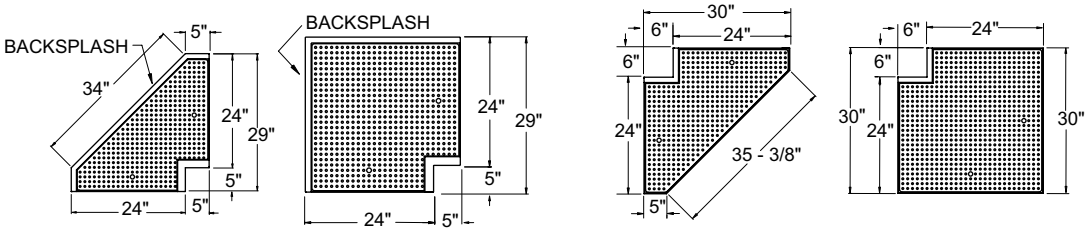

CILB-LN CILB COLB-LN COLB

Glastender

Glastender, Inc. • 5400 North Michigan Road • Saginaw, MI • 48604-9780
800.748.0423 • 989.752.4275 • Fax 989.752.4444 • www.glastender.com

Corner Inside and Outside Wedge Drainboards*

Corner Inside and Outside Wedge Drainboards are for 75° and smaller inside and outside turns. They are designed to align with 19″ or 24″ deep underbar.

Product Information

(see CIW and COW Spec Sheets for complete details)

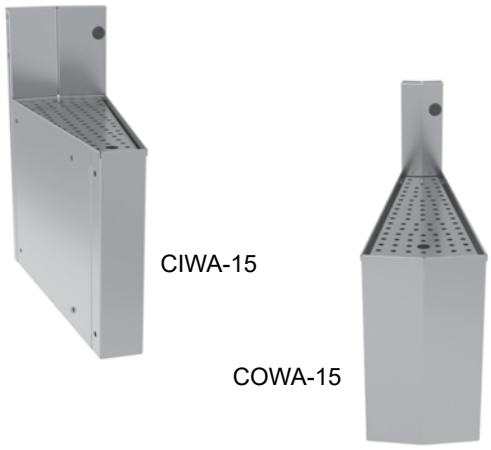

Sample Corner Inside and Outside Wedge Drainboard Plan Views

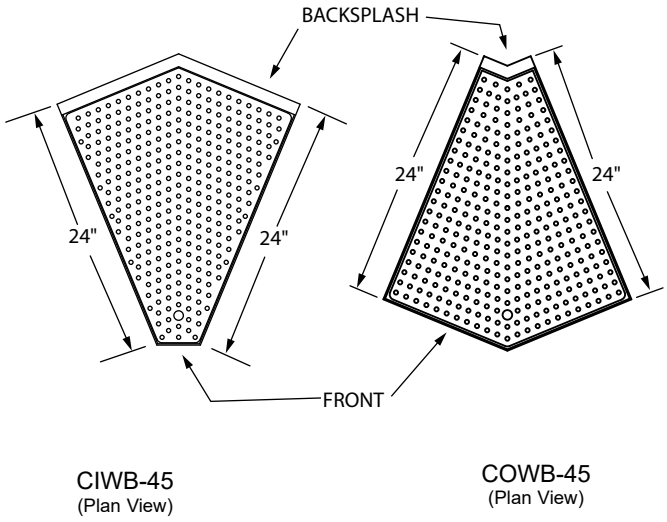

19″ Deep Corner Wedge Drainboards*

Model	List	Degree	Turn	Weight
CIWA-75	$1,749	75°	Inside	45#
COWA-75	$1,841	75°	Outside	45#
CIWA-60	$1,528	60°	Inside	40#
COWA-60	$1,576	60°	Outside	40#
CIWA-45	$1,349	45°	Inside	36#
COWA-45	$1,356	45°	Outside	36#
CIWA-30	$1,208	30°	Inside	33#
COWA-30	$1,188	30°	Outside	33#
CIWA-15	$1,109	15°	Inside	30#
COWA-15	$1,069	15°	Outside	30#
CIWA-10**	$587	10°	Inside	27#
CIWA-5**	$568	5°	Inside	25#

*NOTE: These items are manufactured to order and are not returnable

**NOTE: 5° and 10° models have a flat fillerboard top

24″ Deep Corner Wedge Drainboards*

Model	List	Degree	Turn	Weight
CIWB-75	$2,128	75°	Inside	50#
COWB-75	$2,254	75°	Outside	50#
CIWB-60*	$1,799	60°	Inside	45#
COWB-60	$1,881	60°	Outside	45#
CIWB-45	$1,567	45°	Inside	40#
COWB-45	$1,575	45°	Outside	40#
CIWB-30	$1,362	30°	Inside	37#
COWB-30	$1,337	30°	Outside	37#
CIWB-25	$1,307	25°	Inside	37#
CIWB-20	$1,255	20°	Inside	35#
CIWB-15	$1,204	15°	Inside	35#
COWB-15	$1,171	15°	Outside	35#
CIWB-10**	$622	10°	Inside	27#
CIWB-5**	$596	5°	Inside	25#

Does your Corner Drainboard need a leg set?

Corner drainboards are designed to be attached between two pieces of underbar, or two stable vertical surfaces and do not include legs. If attached to equipment or surface on only one side, a leg set for one-side mounting is needed. Some models can also be converted to freestanding using the applicable leg set. See table for applicable models.

Configurable Leg Set Options

Applicable Model	Description	List
CILB and COLB	Leg set, one-side mounting	$155
CILB and COLB	Leg set, freestanding	$465
CIR	Leg set, one-side mounting	$155
CIR	Leg set, freestanding (CIR-24/24-LN excluded)	$465
CIWA and CIWB	Leg set, one-side mounting (5° and 10° models excluded)	$155
COWA and COWB	Leg set, one-side mounting	$155
NOTE: CIWA/B and COWA/B models cannot be freestanding		

Glassracks are designed to hold three racks of glassware: one on the bottom shelf and one on each of the two adjustable glass rack slides. The 24″ wide models hold 20″ by 20″ racks and the 18″ wide models hold the 16″ round racks used with the Glastender GT-18 glasswashers.



GRB-24

Product Information

(see GR Spec Sheet for complete details)

Standard Features

- All stainless steel construction
- Adjustable stainless steel bullet feet
- Full bottom shelf with drain
- Two adjustable glass rack slides
- Storage for three (3) glassracks

*NOTE: Glassracks are manufactured to order and are not returnable

19″ Deep Glassracks

Model	List	Length	Weight
GRA-18	$2,010	18″	60#
GRA-24	$2,228	24″	70#

24″ Deep Glassracks

Model	List	Length	Weight
GRB-18	$2,247	18″	70#
GRB-24	$2,476	24″	80#

Drainboard Glassracks

Pricing effective January 1, 2027

Drainboard Glassracks have a stationary or roll-out bottom shelf, adjustable or roll-out intermediate shelf, and drainboard work surface. All models are 24″ deep. The 24″ wide models hold 20″ by 20″ racks and the 18″ wide model holds the 16″ round racks used with the Glastender GT-18 glasswashers. Since drainboard glassrack shelves are solid, they can be used for non-glassrack storage also. (If a 19″ deep drainboard glassrack is required, please see 19″ deep drainboard cabinets less doors on page 30)



DBGR-24-RS
(Glassrack not included)



DBGR-18

Product Information

(see DBGR Spec Sheet for complete details)

Standard Features

- All stainless steel construction
- Adjustable stainless steel bullet feet
- One-piece seamless top, front rail and backsplash
- DBGR-18 and DBGR-24 have bottom shelf and one adjustable intermediate shelf
- DBGR-24-RS has roll-out bottom shelf and one roll-out intermediate shelf (intermediate shelf is not adjustable)
- Solid shelves are also usable for non-glassrack storage
- Work surface consists of a drainboard top with drain pan and separate perforated insert for better air circulation
- Intermediate shelf is still removable after unit is plumbed
- Smooth interior walls for easy cleaning and a finished appearance

24″ Deep Drainboard Glassracks

Model	List	Length	Weight
DBGR-18	$2,462	18″	80#
DBGR-24	$2,721	24″	90#
DBGR-24-RS	$3,981	24″	100#



DBCB-18

Drainboard Cabinets have a bottom shelf, adjustable intermediate shelf, and drainboard work surface. They are available with or without doors. The models with doors come with a lock standard. The 12″, 18″, and 24″ wide models have one door and all other models have two doors.

NOTE: Drainboard Cabinets are also available with a flat stainless steel fillerboard top in lieu of the drainboard top. Substitute an 'F' for the 'D' in the model number when ordering and use the same price. Fillerboards cabinets are manufactured to order and are not returnable.

Product Information

(see DBC Spec Sheet for complete details)

Standard Features

- All stainless steel construction
- Adjustable stainless steel bullet feet
- One-piece seamless top, front rail and backsplash
- One bottom shelf and one adjustable intermediate shelf
- Shelves are removable and feature radius corners for easy cleaning
- Available with or without doors
- Doors feature integral handle
- Lock standard on models with doors
- Work surface consists of a drainboard top with drain pan and separate perforated insert for better air circulation
- Floor and intermediate shelf are still removable after unit is plumbed
- Smooth interior walls for easy cleaning and a finished appearance

19″ Deep Drainboard Cabinets

Model	List	Length	Weight
DBCA-12*	$2,611	12″	75#
DBCA-18*	$2,944	18″	85#
DBCA-24*	$3,278	24″	95#
DBCA-30*	$3,687	30″	105#
DBCA-36*	$4,020	36″	115#
DBCA-42*	$4,354	42″	125#
DBCA-48*	$4,690	48″	135#

24″ Deep Drainboard Cabinets

Model	List	Length	Weight
DBCB-12	$2,654	12″	85#
DBCB-18	$3,007	18″	95#
DBCB-24	$3,355	24″	105#
DBCB-30*	$3,788	30″	115#
DBCB-36*	$4,137	36″	125#
DBCB-42*	$4,488	42″	135#
DBCB-48*	$4,842	48″	145#

19″ Deep Drainboard Cabinets Less Doors

Model	List	Length	Weight
DBCA-12-LD*	$2,127	12″	60#
DBCA-18-LD*	$2,363	18″	70#
DBCA-24-LD*	$2,603	24″	80#
DBCA-30-LD*	$2,841	30″	90#
DBCA-36-LD*	$3,078	36″	100#
DBCA-42-LD*	$3,319	42″	110#
DBCA-48-LD*	$3,559	48″	120#

24″ Deep Drainboard Cabinets Less Doors

Model	List	Length	Weight
DBCB-12-LD	$2,202	12″	70#
DBCB-18-LD	$2,462	18″	80#
DBCB-24-LD	$2,721	24″	90#
DBCB-30-LD*	$2,975	30″	100#
DBCB-36-LD*	$3,233	36″	110#
DBCB-42-LD*	$3,489	42″	120#
DBCB-48-LD*	$3,751	48″	130#

*NOTE: These items are manufactured to order and are not returnable



DBHA-18-LD

19″ Deep Drainboard Half Cabinets

Model	List	Door	Length	Weight
DBHA-12	$2,194	Yes	12″	50#
DBHA-18	$2,479	Yes	18″	55#
DBHA-24	$2,745	Yes	24″	60#
DBHA-12-LD	$1,863	No	12″	40#
DBHA-18-LD	$2,090	No	18″	45#
DBHA-24-LD	$2,320	No	24″	50#

24″ Deep Drainboard Half Cabinets

Model	List	Door	Length	Weight
DBHB-12	$2,209	Yes	12″	60#
DBHB-18	$2,491	Yes	18″	65#
DBHB-24	$2,783	Yes	24″	70#
DBHB-12-LD	$1,912	No	12″	50#
DBHB-18-LD	$2,158	No	18″	55#
DBHB-24-LD	$2,194	No	24″	60#

*NOTE: Drainboard Cabinets are manufactured to order and are not returnable

Product Information

(see DBH Spec Sheet for complete details)

Standard Features: All stainless steel construction • Adjustable stainless steel bullet feet • One-piece seamless top, front rail and backsplash • Available with or without a door • Door features integral handle • Lock standard on models with a door • Work surface consists of a drainboard top with drain pan and separate perforated insert for better air circulation • Floor is still removable after unit is plumbed and includes radius corners for easy cleaning • Smooth interior walls for easy cleaning and a finished appearance

Drainboard Half Cabinets increase the available storage area yet are still on 16″ legs allowing room for cleaning underneath. Drainboard Half Cabinets have a bottom shelf and drainboard work surface. They are available with or without a door (use suffix '-LD' for models without a door). The models with a door include a lock standard.

NOTE: Drainboard Half Cabinets are also available with a flat stainless steel fillerboard top in lieu of the drainboard top. Substitute an 'F' for the 'D' in the model number when ordering and use the same price.



ACB-18 (Shown without attached equipment)

Product Information

(see ACB Spec Sheet for complete details)

The Add-On Cabinet Base is designed to be installed beneath standard underbar equipment to provide additional storage • It can also enhance the look of your bar by eliminating the need to store loose items on the floor and making plumbing less visible • The Add-On Cabinet Base features a stainless steel floor that does not go all the way to the back of the cabinet, which provides an access opening for plumbing • The removable stainless steel floor has radius corners for easy cleaning • The interior walls are dual panel constructed for an easy to clean, smooth interior

*NOTE: Add-On Cabinet Bases are manufactured to order and are not returnable

Add-On Cabinet Bases

Model	List	Door	Length	Weight
ACB-12	$1,299	One	12″	20#
ACB-14	$1,311	One	14″	22#
ACB-16	$1,323	One	16″	24#
ACB-18	$1,355	One	18″	25#
ACB-20	$1,384	One	20″	27#
ACB-22	$1,415	One	22″	29#
ACB-24	$1,659	Two	24″	30#
ACB-26	$1,661	Two	26″	32#
ACB-28	$1,692	Two	28″	32#
ACB-30	$1,724	Two	30″	35#
ACB-32	$1,756	Two	32″	37#
ACB-34	$1,786	Two	34″	37#
ACB-36	$1,818	Two	36″	40#
ACB-38	$1,848	Two	38″	42#
ACB-40	$1,896	Two	40″	42#
ACB-42	$1,929	Two	42″	45#
ACB-44	$1,960	Two	44″	47#
ACB-46	$1,990	Two	46″	47#
ACB-48	$2,023	Two	48″	50#



ACB-18 with LDA-18S attached

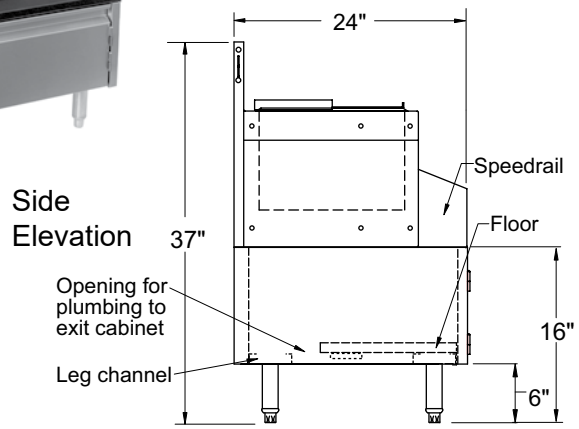

Product Information

(see PCB Spec Sheet for complete details)

Available in 18″ and 24″ lengths, POS Cabinets have a 26″ high work surface to accommodate a cash drawer and POS monitor • A louvered door to ventilate the storage cabinet is standard • The work surface includes a grommeted cord access hole

Standard Features

- All stainless steel construction with adjustable bullet feet
- One-piece, seamless top and backsplash
- Louvered door features integral handle
- Door lock standard
- Special 26″ high work surface height to accommodate cash drawer and POS monitor
- Grommeted cord access hole in work surface
- Large access hole in back wall of unit
- Smooth interior walls for easy cleaning and a finished appearance



PCB-24

24″ Deep POS Cabinets

Model	List	Length	Weight
PCB-18	$3,259	18″	75#
PCB-24	$3,590	24″	85#

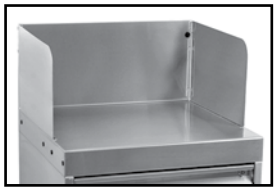

LSP & RSP Accessories (shown on PCB-24)

POS Cabinet Accessories*

Model	Description	List	Weight
LSP	Left side splash	$197	4#
RSP	Right side splash	$197	4#

*NOTE: Verify cash drawer width before ordering side splash accessories

All faucets are certified low lead compliant



HSA-12

HSA-12-D

HSA-12-D with LSA-D and RSA-D

Product Information

(see HS, DHS, SW, SW Cabinets, and FS12 Spec Sheets for complete details)

19″ Deep Hand Sinks

Model	List	Length	Weight
HSA-12	$2,182	12″	45#
HSA-18*	$2,212	18″	50#
HSA-12-D	$2,564	12″	50#
DHSA-18	$3,043	18″	60#

24″ Deep Hand Sinks

Model	List	Length	Weight
HSB-12	$2,281	12″	50#
HSB-18*	$2,392	18″	55#
HSB-12-D*	$2,676	12″	55#
HSB-12-AD	$2,727	12″	55#
DHSB-12	$3,008	12″	60#
DHSB-12-C	$3,816	12″	75#
DHSB-18	$3,168	18″	70#

19″ Deep Wet Waste Sinks

Model	List	Length	Weight
SWA-12	$2,255	12″	47#
SWA-18*	$2,285	18″	52#

24″ Deep Wet Waste Sinks

Model	List	Length	Weight
SWB-12	$2,354	12″	52#
SWB-18*	$2,465	18″	57#



HSB-12-AD



DHSB-12

SWB-12



*NOTE: These units are manufactured to order and are not returnable



LSA-D and RSA-D

Configurable Options

Model	Description	List	Weight
LSA-D	19″ deep left side splash	$197	4#
RSA-D	19″ deep right side splash	$197	4#
LSB-D	24″ deep left side splash	$229	5#
RSB-D	24″ deep right side splash	$229	5#
FOF-B	Foot-operated backsplash faucet for HSA-12, HSA-12-D, HSB-12-AD, FS12, SWA-12	$725	3#
FOF-D	Foot-operated deck faucet for HSA-18, HSB-12, HSB-12-D, HSB-18, DHSA-18, DHSB-12, DHSB-18, SWB-12-C, SWB-18-DW, SWB-18-DB, SWB-24L-C, SWB-24R-C, SWA-18, SWB-12, SWB-18	$553	3#
KOF-D	Knee-operated deck faucet for HSB-12, HSB-18, SWB-12, SWB-18	$572	3#



FOF-B
Optional foot-operated backsplash faucet



KOF-D
Optional knee-operated deck faucet



FOF-D
Optional foot-operated deck faucet

NOTE: FOF and KOF - see table for applicable models

⚠**WARNING:** The plastic wet waste strainer included with this product can expose you to chemicals including Bisphenol A (BPA), which is known to the State of California to cause birth defects or other reproductive harm. For more information, go to www.P65Warnings.ca.gov.
Warning applies to State of California only. Part #03000483

Glastender

Glastender, Inc. • 5400 North Michigan Road • Saginaw, MI • 48604-9780
800.748.0423 • 989.752.4275 • Fax 989.752.4444 • www.glastender.com

All faucets are certified low lead compliant

24″ Deep Multi-Purpose Sinks

Model	List	Length	Weight
FS12	$4,810	12″	75#
SWB-12-C	$3,418	12″	75#
SWB-18-DW	$3,828	18″	85#
SWB-18-DB	$3,085	18″	65#
SWB-24L-C*	$4,557	24″	105#
SWB-24R-C*	$4,557	24″	105#

*L = Sink Left, R = Sink Right



FS12 - Patented.
For more information visit:
https://www.glastender.com/patents

FS12 - The Fusion Sink is a combination hand sink and wet waste sink. The tiered unit includes an upper hand sink with faucet and soap dispenser, a lower sink with lift-out perforated plastic wet waste strainer, and side splashes. The upper sink drains into the lower sink to help melt ice. A front-flush C-fold paper towel dispenser is included in the front skirt.



SWB-12-C - Includes a sink with faucet and lift-out perforated plastic wet waste strainer and cabinet base with hinged access door for storing up to three one-gallon chemical containers.



SWB-18-DW - Includes a sink with faucet and lift-out perforated plastic wet waste strainer, dry waste chute and cabinet base with hinged access door for storing a trash receptacle. A stainless (DWC) or plastic (03005391) trash receptacle is offered as a separate accessory.



SWB-18-DB - Tiered unit includes an upper drainboard deck for storing glassware and a lower sink with a faucet and lift-out perforated plastic wet waste strainer.



SWB-24L-C - Dual purpose work surface is half drainboard and half sink. Includes a faucet and lift-out perforated plastic wet waste strainer. The open-front cabinet base includes a center divider wall for storing up to three one-gallon chemical containers on one side and dry storage on the other.



TR

†NOTE: Speed rails and dry waste rails cannot be mounted to models:
- HSA-12-D
- DHSA-18
- HSB-12-D
- HSB-12-AD
- DHSB-12
- DHSB-12-C
- DHSB-18
- SWB-12-C
- SWB-18-DW
- SWB-18-DB
- SWB-24L-C
- SWB-24R-C

♦NOTE: TD-C Paper towel dispenser cannot be mounted to models:
- SWB-12-C
- SWB-18-DW
- SWB-18-DB
- SWB-24L-C
- SWB-24R-C

Accessories

Model	Description	List	Weight
SSR-12†	12″ single speed rail	$275	4#
SSR-18†	18″ single speed rail	$302	6#
DSR-12†	12″ double speed rail	$545	8#
DSR-18†	18″ double speed rail	$598	12#
03000483	Wet waste sink strainer	$73	2#
TR	Towel ring	$26	1#
DWR-12†	Dry waste rail	$288	6#
03000511	Wrist handles (set of two)	$61	2#
DWC	Trash receptacle, stainless steel	$643	10#
03005491	Trash receptacle, 28½ qt, gray plastic	$92	5#
TD-C♦	Paper towel dispenser, C-fold	$352	5#
03001873	Liquid soap dispenser, hand-pump	$102	1#
03014739	Aerator, faucet, 1.5 GPM	$31	1#
03014738	Aerator, faucet, 0.5 GPM	$31	1#
03014737	Aerator, faucet, 0.2 GPM	$31	1#

⚠**WARNING:** The plastic wet waste strainer included with this product can expose you to chemicals including Bisphenol A (BPA), which is known to the State of California to cause birth defects or other reproductive harm. For more information, go to www.P65Warnings.ca.gov.
Warning applies to State of California only. Part #03000483

All faucets are certified low lead compliant

Product Information

(see DS, TS, and FS Spec Sheets for complete details)

- Compartment Sinks come in three different varieties: two, three, and four compartment
- They feature an exclusive one-piece 18 gauge stainless steel top that is seamless from the front rail all the way through the backsplash
- Each variety is offered with or without built-in drainboards on one or both sides of the sink compartment
- Drainboards, where included, are a seamless and integral part of the work surface
- The seamless welded bowls are 16 gauge fabricated stainless steel
- An 'L' or 'R' suffix in the model number designates the location of the sink compartment as left or right when there is only one drainboard
- FS models are available with 1 or 2 faucets**

Standard Features

- All stainless steel construction and stainless steel bullet feet
- One-piece seamless top, front rail and backsplash
- 16 gauge stainless steel fabricated sink bowls
- 19″ deep models have a backsplash mounted faucet
- Integral drainboards have lift-out stainless steel perforated insert
- Perforated stainless steel inserts are available to cover sinks when not in use
- Includes one overflow tube per bowl

Two Compartment Sinks with Stainless Sink Section

19″ Deep		24″ Deep					
Model	List	Model	List	Overall Length	Sink Location	Drainboard Length	Weight
DSA-24-S*	$3,872	DSB-24-S*	$3,864	24″	Center	N/A	90#
DSA-36L-S*	$4,217	DSB-36L-S*	$4,246	36″	Left	12″	100#
DSA-36R-S*	$4,217	DSB-36R-S*	$4,246	36″	Right	12″	100#
DSA-48-S*	$4,517	DSB-48-S*	$4,655	48″	Center	2 @ 12″	110#

Three Compartment Sinks with Stainless Sink Section

19″ Deep		24″ Deep					
Model	List	Model	List	Overall Length	Sink Location	Drainboard Length	Weight
TSA-36-S	$4,477	TSB-36-S	$4,507	36″	Center	N/A	110#
TSA-48L-S*	$4,780	TSB-48L-S*	$4,889	48″	Left	12″	120#
TSA-48R-S*	$4,780	TSB-48R-S*	$4,889	48″	Right	12″	120#
TSA-60-S	$5,110	TSB-60-S	$5,277	60″	Center	2 @ 12″	130#
TSA-60L-S*	$5,110	TSB-60L-S*	$5,277	60″	Left	24″	130#
TSA-60R-S*	$5,110	TSB-60R-S*	$5,277	60″	Right	24″	130#
TSA-66L-S*	$5,237	TSB-66L-S*	$5,439	66″	Left	30″	140#
TSA-66R-S*	$5,237	TSB-66R-S*	$5,439	66″	Right	30″	140#
TSA-72-S	$5,378	TSB-72-S	$5,593	72″	Center	2 @ 18″	145#
TSA-84-S*	$5,750	TSB-84-S*	$6,030	84″	Center	2 @ 24″	160#
TSA-96-S*	$6,047	TSB-96-S*	$6,394	96″	Center	2 @ 30″	175#

Four Compartment Sinks with Stainless Sink Section

19″ Deep		24″ Deep					
Model	List**	Model	List**	Overall Length	Sink Location	Drainboard Length	Weight
FSA-48-S*	$5,502	FSB-48-S*	$5,582	48″	Center	N/A	125#
FSA-60L-S*	$5,809	FSB-60L-S*	$5,949	60″	Left	12″	140#
FSA-60R-S*	$5,809	FSB-60R-S*	$5,949	60″	Right	12″	140#
FSA-66L-S*	$5,958	FSB-66L-S*	$6,133	66″	Left	18″	150#
FSA-66R-S*	$5,958	FSB-66R-S*	$6,133	66″	Right	18″	150#
FSA-72-S	$6,142	FSB-72-S	$6,309	72″	Center	2 @ 12″	155#
FSA-72L-S*	$6,142	FSB-72L-S*	$6,309	72″	Left	24″	155#
FSA-72R-S*	$6,142	FSB-72R-S*	$6,309	72″	Right	24″	155#
FSA-84-S*	$6,491	FSB-84-S*	$6,735	84″	Center	2 @ 18″	170#
FSA-96-S*	$6,796	FSB-96-S*	$7,092	96″	Center	2 @ 24″	185#

*NOTE: These Compartment Sink Units are manufactured to order and are not returnable

**NOTE: List price includes one (1) faucet. For two (2) faucets, add $324 for FSA models and add $290 for FSB models.



Accessories

Model	Description	List	Wgt
SSR-24	24″ single speed rail	$331	7#
SSR-36	36″ single speed rail	$384	12#
SSR-48	48″ single speed rail	$441	18#
SSR-60	60″ single speed rail	$675	28#
SSR-66	66″ single speed rail	$703	32#
SSR-72	72″ single speed rail	$729	35#
SSR-84	84″ single speed rail	$787	42#
DSR-24	24″ double speed rail	$644	14#
DSR-36	36″ double speed rail	$753	24#
DSR-48	48″ double speed rail	$869	44#
DSR-60	60″ double speed rail	$1,201	56#
DSR-66	66″ double speed rail	$1,267	64#
DSR-72	72″ double speed rail	$1,320	70#
DSR-84	84″ double speed rail	$1,427	84#
TR	Towel ring	$26	1#
LWS	Large wet waste strainer	$97	3#
DWR-12	Dry waste rail	$288	6#
03002552	Sink cover, perforated for DSA or DSB	$188	5#
03002553	Sink cover, perforated for TSA or TSB	$282	8#
03002554	Sink cover, perforated for FSA or FSB	$380	12#

All faucets are certified low lead compliant

MFS-12 Mixology Unit*

Includes 9-1/4″ by 11-1/2″ by 6″ deep sink, backsplash-mounted faucet, lift-out perforated plastic sink strainer, and 8″ by 11″ securely mounted and easily removable cutting board.

Model	List	Lth	Wgt
MFS-12	$2,961	12″	55#

*NOTE: This unit is manufactured to order and is not returnable

MFT-8 Mixology Unit

Includes 6″ diameter mixology tool well with faucet, push-down rinser faucet, and 7-1/2″ by 7-1/2″ securely mounted and easily removable cutting board. NOTE: No legs. Must mount to adjacent underbar.

Model	List	Lth	Wgt
MFT-8	$2,980	8″	40#

MFT-20 Mixology Unit

Includes 9-1/4″ by 11-1/2″ by 6″ deep sink, backsplash-mounted faucet, lift-out perforated plastic sink strainer, push-down rinser faucet, 6″ diameter mixology tool well with faucet, 8″ by 11″ securely mounted and easily removable cutting board, and removable ice scoop well.

Model	List	Lth	Wgt
MFT-20	$4,883	20″	65#

MRS-12 Mixology Unit

Includes 9-1/4″ by 11-1/2″ by 6″ deep sink, backsplash-mounted faucet, lift-out perforated plastic sink strainer, and push-down rinser faucet.

Model	List	Lth	Wgt
MRS-12	$3,014	12″	55#

MTS-14 Mixology Unit

Includes 9-1/4″ by 11-1/2″ by 6″ deep sink, backsplash-mounted faucet, lift-out perforated plastic sink strainer, push-down rinser faucet, and 6″ diameter mixolog y tool well with faucet.

Model	List	Lth	Wgt
MTS-14	$4,456	14″	55#

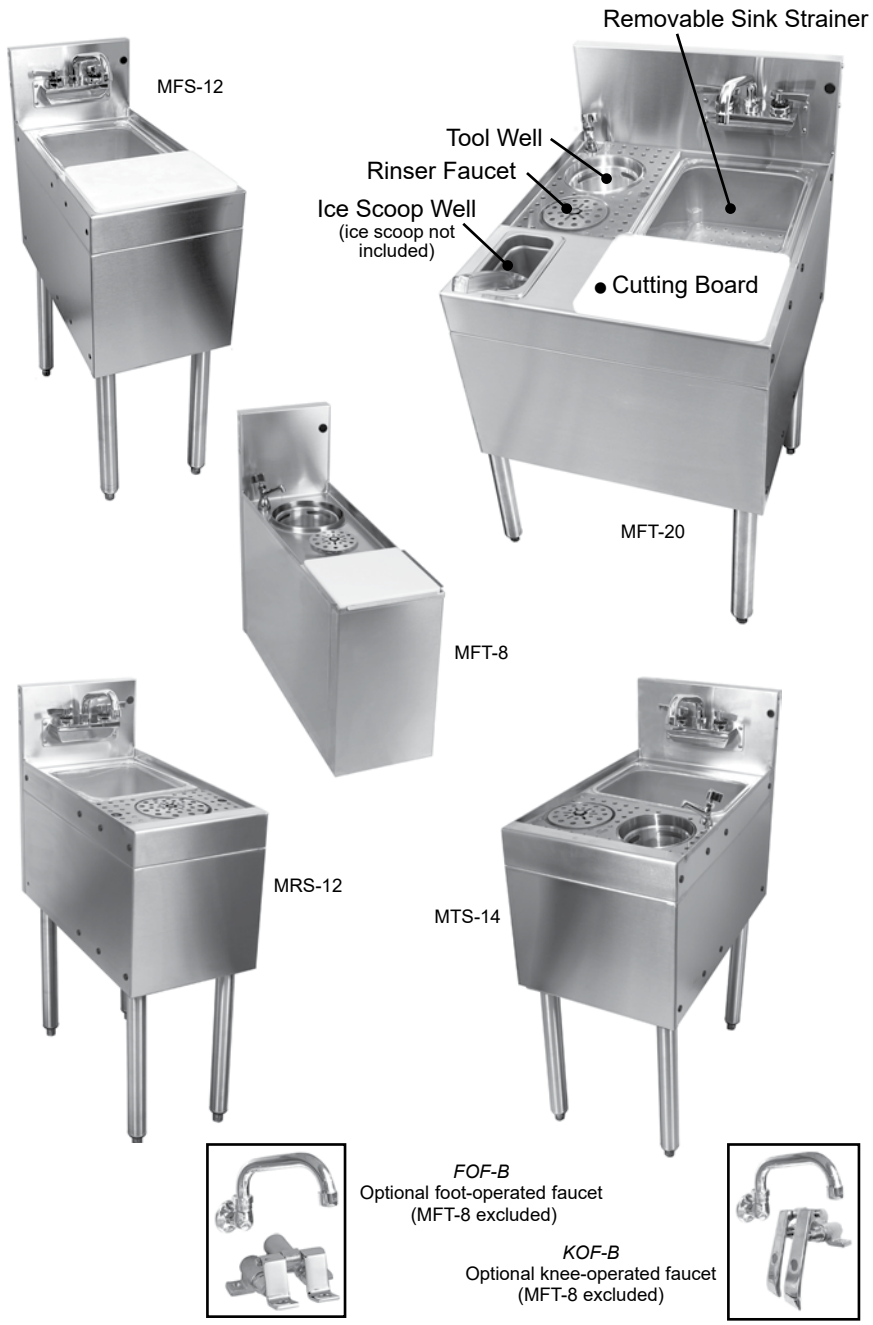

FOF-B
Optional foot-operated faucet
(MFT-8 excluded)

KOF-B
Optional knee-operated faucet
(MFT-8 excluded)

Configurable Options

Model	Description	List	Wgt
LSM	Left side splash, MFS-12, MFT-8 or MFT-20	$197	4#
RSM	Right side splash, MFS-12, MFT-8 or MFT-20	$197	4#
LSB-D	Left side splash, MRS-12, MTS-14	$229	5#
RSB-D	Right side splash, MRS-12, MTS-14	$229	5#
FOF-B	Foot-operated backsplash faucet (MFT-8 excluded)	$725	3#
KOF-B	Knee-operated backsplash faucet (MFT-8 excluded)	$742	3#

Rinser faucet installation notes:

- Important: Unit must be installed in conformance with applicable federal, state, and local plumbing codes, including adequate backflow when required.
- Must install backflow prevention device conforming to ANSI/ASSE 1022 or ANSI/ASSE 1024 to meet plumbing code (not included).
- Install in-line water regulator (included).
- A separate shut-off valve is recommended (not included).

⚠**WARNING:** The plastic wet waste strainer included with this product can expose you to chemicals including Bisphenol A (BPA), which is known to the State of California to cause birth defects or other reproductive harm. For more information, go to www.P65Warnings.ca.gov.
Warning applies to State of California only. Part #03000483

All faucets are certified low lead compliant

Mixology Stations include the following standard features:

- 4″ soda manifold holder
- 24″ main ice bin liner
- 12″ garnish well
- Single speed rail
- 20″ mixology unit

*NOTE: Mixology stations are manufactured to order and are not returnable



Drop-in mixology drink rail
(See next page for drop-in mixology wells)

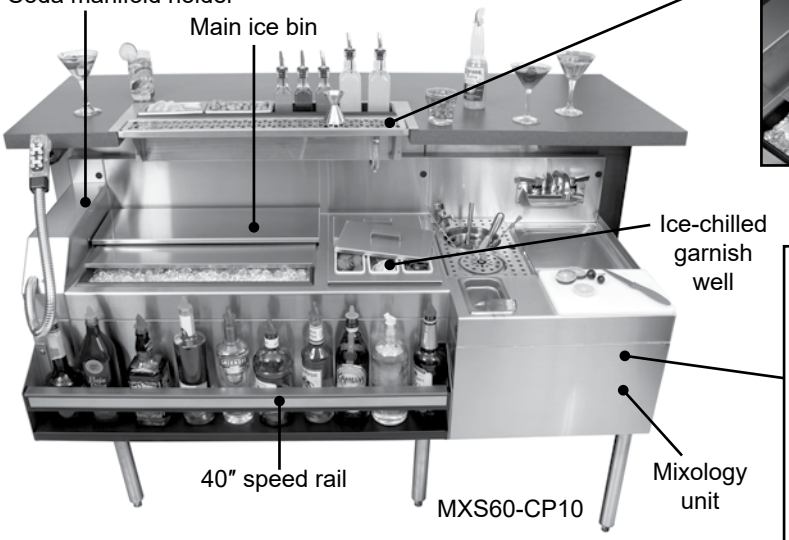

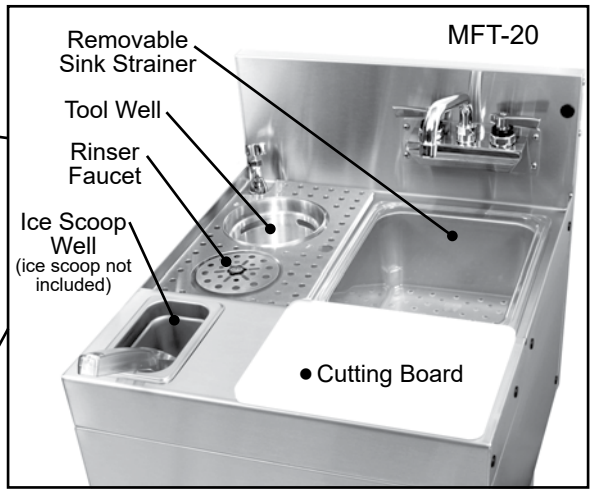

What is different about the 72" mixology station?

The MXS72-CP10 mixology station is 12″ longer, because it also includes a 12″ elixir bottle well.

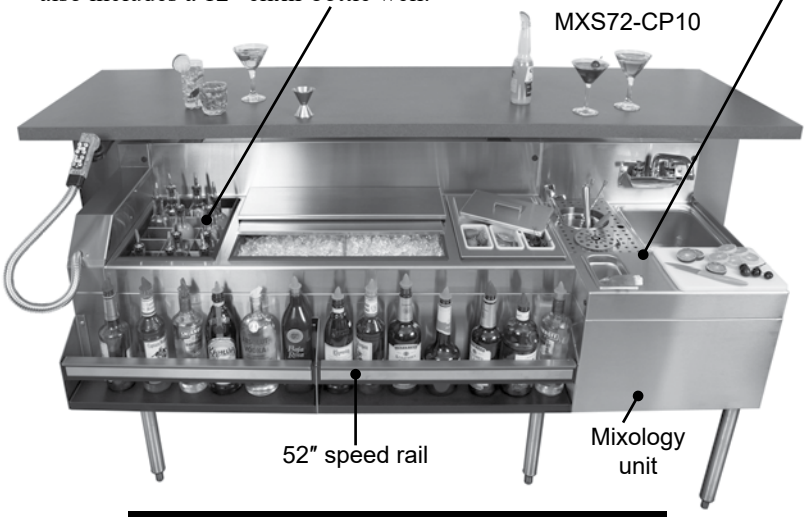

Mixology Station

Model	List	Length	Weight
MXS60-CP10	$13,022	60″	279#
MXS72-CP10	$14,850	72″	322#

Rinser faucet installation notes:

- Important: Unit must be installed in conformance with applicable federal, state, and local plumbing codes, including adequate backflow when required.
- Must install backflow prevention device conforming to ANSI/ASSE 1022 or ANSI/ASSE 1024 to meet plumbing code (not included).
- Install in-line water regulator (included).
- A separate shut-off valve is recommended (not included).

⚠**WARNING:** The plastic wet waste strainer included with this product can expose you to chemicals including Bisphenol A (BPA), which is known to the State of California to cause birth defects or other reproductive harm. For more information, go to www.P65Warnings.ca.gov. **Warning applies to State of California only.** Part #03000483

Product Information

(see MXS Spec Sheet for complete details)

Standard Features

- All stainless steel construction
- Complete line up is flush at 24″ deep to match adjacent underbar
- The SMHA-4 soda manifold housing is designed to house the manifold of Wunder-Bar® or Schroeder America™ 8 to 14 button soda guns
- The garnish well and ice bin are foamed-in-place insulated and include a PVC plastic breaker strip around the liner to prevent thermal transfer so ice lasts longer
- The ice bin includes a built-in ten circuit cold plate, sliding stainless steel cover, and stainless steel ice bin divider
- The garnish well provides ice-chilled storage for six pint-size (16 oz.) condiment cups and includes two lift-off stainless steel covers
- A single speed rail is included
- The MFT-20 model mixology unit includes a push-down rinser faucet to rinse shaker cans, a lift-out perforated plastic sink strainer, a 6″ diameter seamless welded draining dipper well and faucet for mixology tools, an 8″ x 11″ cutting board that is securely mounted but easily removable for cleaning, and an ice scoop well
- The MXS72-CP10 model also includes an elixir bottle well with BRM15 stainless steel rack to hold 15 elixir bottles (NOTE: Recommend Tablecraft 916 (16 oz.) or 9085 (8.5 oz.) olive oil bottles)

Glastender

Glastender, Inc. • 5400 North Michigan Road • Saginaw, MI • 48604-9780
800.748.0423 • 989.752.4275 • Fax 989.752.4444 • www.glastender.com

Drop-In Mixology Wells*

Product Information

(see DI-MW Spec Sheet for complete details)

Standard Features:

- Stainless steel top and interior liner
- PVC plastic breaker strip around well liner: creates 5/16″ raised edge around liner and acts as thermal barrier to prevent heat transfer
- Stainless steel exterior wrap
- 4" deep well liner is 3-5/8" front-to-back
- Designed to hold up to 3-1/2" wide bottles or 1/9th pans
- Installation kit includes: 10′ of clear vinyl drain tube, five - 4″ Ty-wraps, one - 1/2″ PVC elbow, one - 1/2″ nylon elbow, and one drainline splicer

*NOTE: Drop-In Mixology Wells are manufactured to order and are not returnable

Drop-In Mixology Wells

Model	List	Length	Weight
DI-MW24	$1,393	24″	13#
DI-MW30	$1,477	30″	16#
DI-MW36	$1,567	36″	19#

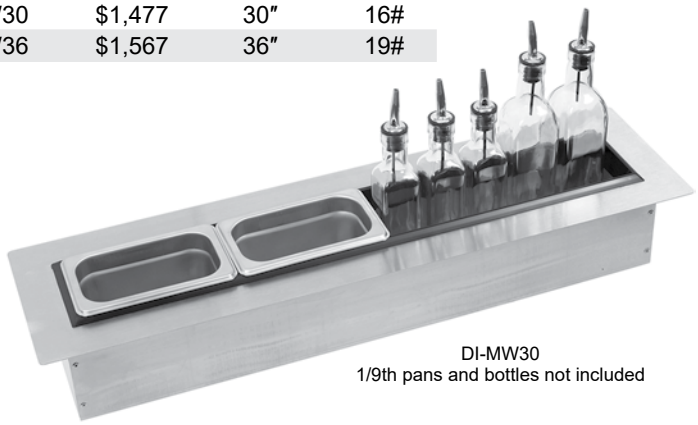

DI-MW30
1/9th pans and bottles not included

Drop-In Mixology Drink Rails*

Product Information

(see DI-MDR Spec Sheet for complete details)

Standard Features

- Stainless steel top and interior liner
- PVC plastic breaker strip around ice bin liner: creates 5/16″ raised edge around liner and acts as thermal barrier to prevent heat transfer
- One-piece top includes drain pan with removable perforated insert
- Stainless steel exterior wrap
- 4" deep well liner is 3-5/8" front-to-back
- Designed to hold up to 3-1/2" wide bottles or 1/9th pans
- Installation kit includes: 10' of clear vinyl drain tube, seven - 4" Ty-wraps, one - 1/2" PVC tee, one - 1/2" nylon elbow, and two drainline splicers

*NOTE: Drop-In Mixology Drink Rails are manufactured to order and are not returnable

Drop-In Mixology Drink Rails

Model	List	Length	Weight
DI-MDR24	$2,100	24″	16#
DI-MDR30	$2,203	30″	20#
DI-MDR36	$2,313	36″	24#



DI-MDR30
1/9th pans and bottles not included

Drop-In Drink Rails

Product Information

(see DI-DR Spec Sheet for complete details)

Standard Features:

- All stainless steel construction
- Available in 24″, 30″, or 36″ lengths
- Drain is a 1/2″ welded tailpiece that exits from the bottom of the unit
- Drain pan includes 1/2" flange
- Installation kit includes: 10' of clear vinyl drain tube, five - 4" Ty-wraps, and two - 1/2" plastic elbows

Drop-In Drink Rails

Model	List	Length	Weight
DI-DR24	$581	24″	7#
DI-DR30	$604	30″	9#
DI-DR36	$624	36″	11#

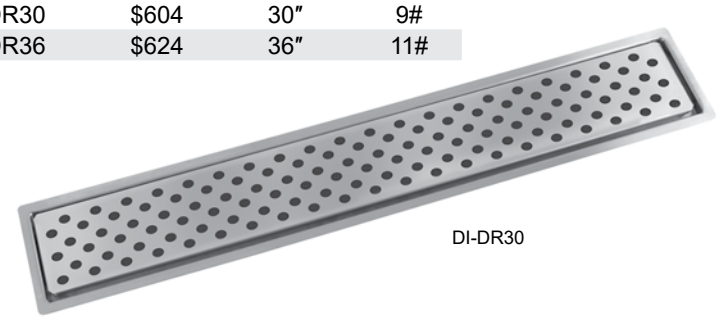

DI-DR30



UMRF
Front View

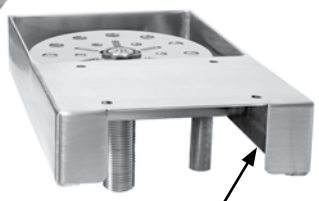

UMRF
Back View

Integrated C-channel
Stiffener

Rinser faucet installation notes:
- Important: Unit must be installed in conformance with applicable federal, state, and local plumbing codes, including adequate backflow when required.
- Must install backflow prevention device conforming to ANSI/ASSE 1022 or ANSI/ASSE 1024 to meet plumbing code (not included).
- Install in-line water regulator (included).
- A separate shut-off valve is recommended (not included).

Product Information

(see UMRF Spec Sheet for complete details)

Standard Features:
- All 18 gauge stainless steel construction
- Pan includes radius interior corners for easy cleaning
- Total welded construction with integrated C-channel sides for incredible rigidity
- Installation kit for plumbing 1/2″ tailpiece drain - includes 10′ of vinyl drain tube, (3) ty wraps, (1) elbow, (1) elbow to drain-line adaptor, (4) #10 x 1/2 screws
- Rear deck area with pre-punched screw holes for mounting to underside of bar top

UMRF

Model	List	Weight	Width	Depth	Height
UMRF	$969	8#	5″	9″	1-1/2″

Drop-In Rinser Faucets

Pricing effective January 1, 2027



DI-RF7



DI-RF24

Rinser faucet installation notes:
- Important: Unit must be installed in conformance with applicable federal, state, and local plumbing codes, including adequate backflow when required.
- Must install backflow prevention device conforming to ANSI/ASSE 1022 or ANSI/ASSE 1024 to meet plumbing code (not included).
- Install in-line water regulator (included).
- A separate shut-off valve is recommended (not included).

Product Information

(see DI-RF Spec Sheet for complete details)

Standard Features:
- All stainless steel construction
- Pan includes radius corners for easy cleaning
- Drain is a 1/2″ welded tailpiece that exits from the bottom of the unit
- Drain pan includes 1/2″ flange
- Installation kit includes: 10′ of clear vinyl drain tube, five - 4″ Ty-wraps, and two - 1/2″ plastic elbows

Drop-In Drink Rails

Model	List	Length	Weight
DI-RF7	$1,006	7″	8#
DI-RF12	$1,034	12″	10#
DI-RF18	$1,063	18″	12#
DI-RF24	$1,091	24″	14#
DI-RF30	$1,120	30″	16#
DI-RF36	$1,149	36″	18#

Drop-In Rinser Faucets

Pricing effective January 1, 2027

Rinser faucet installation notes:
- Unit does not provide a 1″ air gap.
- Must be installed with external backflow prevention to meet applicable feder, state, and local plumbing code requrements.
- Install in-line water pressure regulator (included).
- A separate shut-off valve is recommended (not included).



RF24

Product Information

(see RF Spec Sheet for complete details)

Standard Features:
- Stainless steel construction

Rinser Faucets

Model	List	Width	Height	Weight
RF-4	$454	4″	3-1/2″	3#
RF-6	$467	6″	3-1/2″	3#

Glastender, Inc. • 5400 North Michigan Road • Saginaw, MI • 48604-9780
800.748.0423 • 989.752.4275 • Fax 989.752.4444 • www.glastender.com



DR-36L

Conveniently mounts to underside of bar top to provide stainless steel draining drink rail.

Product Information

(see DR Spec Sheet for complete details)

Standard Features: All stainless steel construction • One-piece, seamless mounting deck and pan with removable perforated inserts • 30″ and 36″ models have one gusset and 42″ and 48″ models have two gussets for added strength • Drain consists of 1/2″ welded tailpiece that exits from the back of the unit • 45° and 90° inside and outside corner filler sections available • Installation kit includes: 10′ of clear vinyl drain tube, one 4″ Ty-wrap, three #10 x 1/2″ stainless steel wood screws, three cable clamps and one 1/2″ x 1/2″ x 1/2″ plastic tee

Drink Rails

Model	List	Length	Drain	Weight
DR-12L	$581	12″	Left	7#
DR-12R	$581	12″	Right	7#
DR-18L	$618	18″	Left	8#
DR-18R	$618	18″	Right	8#
DR-24L	$650	24″	Left	9#
DR-24R	$650	24″	Right	9#
DR-30L	$693	30″	Left	11#
DR-30R	$693	30″	Right	11#
DR-36L	$724	36″	Left	13#
DR-36R	$724	36″	Right	13#
DR-42L	$764	42″	Left	15#
DR-42R	$764	42″	Right	15#
DR-48L	$800	48″	Left	18#
DR-48R	$800	48″	Right	18#

Inside and Outside Corner Fillers

Model	Description	List	Weight
DR-IC45	45° inside corner filler	$348	8#
DR-IC90	90° inside corner filler	$362	10#
DR-OC45	45° outside corner filler	$348	8#
DR-OC90	90° outside corner filler	$362	10#

*NOTE: Drink Rails are manufactured to order and are not returnable

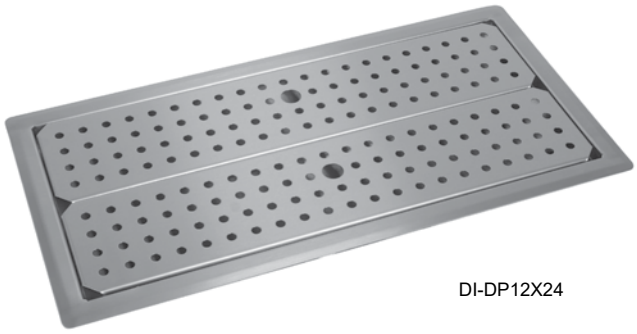

DI-DP12X24

Drain pan drops into a cut-out in your bartop to provide a stainless steel draining work surface.

Product Information

(see DI-DP Spec Sheet for complete details)

Standard Features: All stainless steel construction • 18 gauge stainless steel pan with removable perforated inserts • Available in standard widths of 12″ or 18″ and lengths from 24″ to 48″. Custom sizes also available • Drain consists of 1/2″ welded tailpiece that exits from the bottom of the unit • Drain pan flange includes self-rimming edge for tight fit to work surface • Installation kit includes: 10′ of clear vinyl drain tube, one 4″ Ty-wrap, three #10 x 1/2″ stainless steel wood screws, three #10 x 1/2″ black sheet metal screws, three cable clamps, two 1/2″ x 1/2″ plastic elbows • Cut-out dimensions are 1-3/4″ smaller than the outer flange dimensions • Install by making cut-out in work surface, apply silicone sealant to edge of unit, set in place and plumb drain line

Drop-In Drain Pans

Model	Overall Dimensions	List	Weight
DI-DP12X24	12″ x 24″	$737	14#
DI-DP12X30	12″ x 30″	$792	16#
DI-DP12X36	12″ x 36″	$850	18#
DI-DP12X42	12″ x 42″	$927	20#
DI-DP12X48	12″ x 48″	$1,014	22#
DI-DP18X24	18″ x 24″	$908	18#
DI-DP18X30	18″ x 30″	$980	21#
DI-DP18X36	18″ x 36″	$1,101	24#
DI-DP18X42	18″ x 42″	$1,232	27#
DI-DP18X48	18″ x 48″	$1,362	30#

*NOTE: Drop-In Drain Pans are manufactured to order and are not returnable

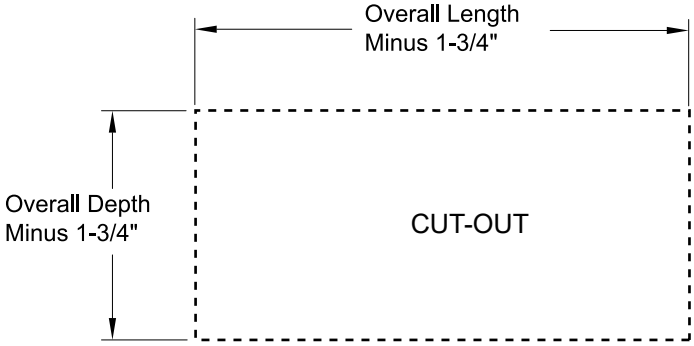

EXAMPLE: A DI-DP12X24 which measures 12″ x 24″ would require a cut-out size of 10-1/4″ x 22-1/4″

Liquor Steps provide tiered liquor bottle storage at a height convenient for bartender use. They maintain the same easy-to-clean, open step and rail design as a speed rail. Each step and rail has PVC sound deadening covers and each rail includes a clear lift-off liquor-identification cover. The 24″ deep models provide four levels of storage front to back and the 29″ deep models provide five levels.

Liquor steps cannot have a speed rail mounted to them. Since speed rails are so common on underbar, liquor steps have been designed to align with underbar that has a speed rail. The four different liquor steps styles are based on the four different equipment-mounting situations.

Product Information

(see LD Spec Sheet for complete details)

Standard Features

- Easily-usable height for storage
- All stainless steel construction and stainless steel bullet feet
- Includes radius interior corners for easy cleaning
- Four (4) levels of liquor bottle storage for 24″ deep models and five (5) levels for 29″ deep models
- Bottle retaining rails with clear lift-off liquor-identification cover
- Open step-and-rail design for easy cleaning and better view of bottles
- Locking covers are available for each individual row - see Locking Speed Rail Covers on page 22
- Matches speed rail design for continuity
- Specially designed side profiles to align with four different equipment-mounting situations
- Rear step on each model is extra wide for specialty liquor bottles



LDA-18S

24″ Deep Liquor Steps

(Aligns with 19″ deep underbar that has a single speed rail)

Model	List	Length	Weight
LDA-12S	$2,029	12″	50#
LDA-18S	$2,220	18″	60#
LDA-24S	$2,418	24″	70#
LDA-30S*	$2,612	30″	80#
LDA-36S*	$2,807	36″	90#
LDA-42S*	$3,002	42″	100#



LDA-18D

29″ Deep Liquor Steps

(Aligns with 19″ deep underbar that has a double speed rail)

Model	List	Length	Weight
LDA-12D	$2,276	12″	55#
LDA-18D	$2,499	18″	65#
LDA-24D	$2,723	24″	75#
LDA-30D*	$2,958	30″	85#
LDA-36D*	$3,183	36″	95#
LDA-42D*	$3,410	42″	105#



LDB-18

24″ Deep Liquor Steps

(Aligns with 24″ deep underbar that has no speed rail)

Model	List	Length	Weight
LDB-12	$2,029	12″	50#
LDB-18	$2,220	18″	60#
LDB-24	$2,418	24″	70#
LDB-30*	$2,612	30″	80#
LDB-36*	$2,807	36″	90#
LDB-42*	$3,002	42″	100#



LDB-18S

29″ Deep Liquor Steps

(Aligns with 24″ deep underbar that has a single speed rail)

Model	List	Length	Weight
LDB-12S	$2,276	12″	55#
LDB-18S	$2,499	18″	65#
LDB-24S	$2,723	24″	75#
LDB-30S*	$2,958	30″	85#
LDB-36S*	$3,183	36″	95#
LDB-42S*	$3,410	42″	105#

*NOTE: These liquor steps are manufactured to order and are not returnable

Glastender

Glastender, Inc. • 5400 North Michigan Road • Saginaw, MI • 48604-9780
800.748.0423 • 989.752.4275 • Fax 989.752.4444 • www.glastender.com

Island Oasis® Stand



IOS-18

The Glastender Island Oasis® Stand is designed for use with the model number SB-3X Island Oasis® machine. The 18″ wide by 29″ deep stand has a lowered draining work surface and extended front to allow the machine to be stored at a convenient and usable height. In most bar applications, the clear plastic ice container will be visible above the bar top.

Product Information

(see IOS Spec Sheet for complete details)

Standard Features

- All stainless steel construction
- Adjustable stainless steel bullet feet
- Radius work surface corners for easy cleaning
- One-piece seamless top and backsplash
- 1″ deep drain pan work surface to capture excess moisture
- Chamfered front to eliminate “knee knockers”

Island Oasis® Stand

Model	List	Length	Weight
IOS-18	$1,831	18″	50#

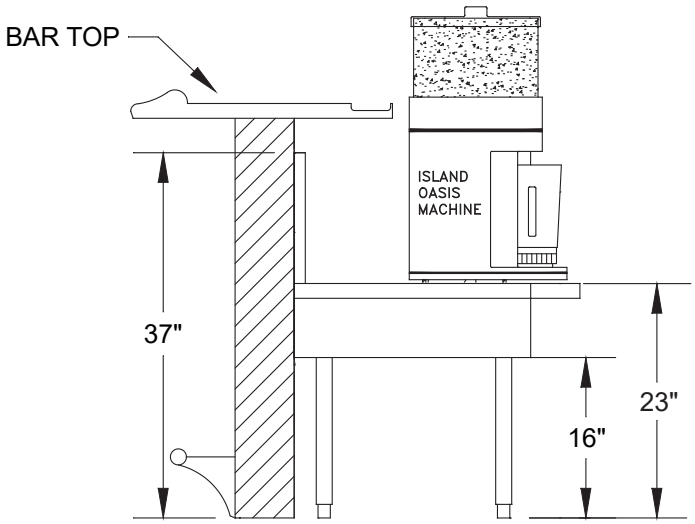

Installation Side Elevation

Call for pricing

Modular Beverage Stations

Product Information

(see CAB-MBS Spec Sheet for complete details)

Modular beverage stations are configured and manufactured to your specific requirements. A complete lineup is designed by selecting from the top options and then specifying the module types and sizes to mount below the top. Stations ship complete in lengths up to 144″.

Top options include: Depth - 24″, 30″, or 36″ • Front overhang - 1/4″, 1″, or 2″ • Nosing profile - flat, marine, or rounded • Backsplash - none, 5″, or 10″ • Endsplash - none, left, right, or both • Integrally welded drip trough • Electrical outlets in the backsplash

Module options include: Adjustable shelf • Drawer • Drop-in • Empty space • End wall • Fixed shelf • Glass rack • Open storage • Roll-out shelf • Sink • Urn stand



108″ L by 30″ D CAB-MBS
Modules left to right: drop-in with solid apron, roll-out shelf, urn stand, and adjustable shelf with solid door

Dry Waste Chutes

Pricing effective January 1, 2027



DWB-12 shown in an installation setting with optional trash receptacle



DWB-15L shown in an installation setting with optional trash receptacle



DWB-14-C† shown with optional trash receptacle

Product Information

(see DW Spec Sheet for complete details)

There are four different Dry Waste Chute models to meet various installation requirements.

Standard Features

- Lift-up top for emptying the trash receptacle
- Completely removable top for thorough cleaning
- The DWB-12 mounts between two adjacent pieces of Glastender main line underbar and has no legs
- The DWB-15L and DWB-15R include a single leg set and mount to an adjacent piece of Glastender main line underbar
- The DWB-14-C† is freestanding
- All models are designed to house a Rubbermaid Slim Jim® trash receptacle

† Patent Pending

24″ Deep Dry Waste Chutes

Model	List	Leg Position	Length	Weight
DWB-12	$1,059	N/A	12″	30#
DWB-14-C†	$2,688	N/A	14″	64#
DWB-15L	$1,671	Left	15″	45#
DWB-15R	$1,671	Right	15″	45#

Configurable Options

Model	Description	List	Wgt
LSDW	Left side splash (DWB-14-C†)	$197	1#
RSDW	Right side splash (DWB-14-C†)	$197	1#

Accessory

Model	Description	List	Wgt
03000497	Rubbermaid Slim Jim®	$311	10#

Dry Waste Rail

Pricing effective January 1, 2027

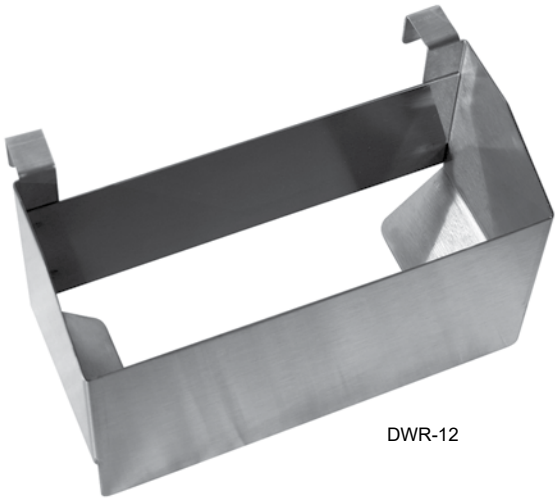

DWR-12

Product Information

(see DWR Spec Sheet for complete details)

- A Dry Waste Rail is 12″ wide, 5″ deep, and looks like a speed rail, but it is actually a removable stainless steel chute
- A 16″ high or shorter trash receptacle is placed under the dry waste rail and the chute directs the refuse into the receptacle
- Dry waste rails cannot be used on Cabinets, Glassracks, or Ice Cream Freezers

Dry Waste Rail

Model	List	Length	Weight
DWR-12	$288	12″	6#

Accessories

Model	Description	List	Wgt
DWC	Trash receptacle, stainless steel	$643	5#
03005491	Trash receptacle, 28½ qt, gray plastic	$92	5#

Glastender®

Glastender, Inc. • 5400 North Michigan Road • Saginaw, MI • 48604-9780
800.748.0423 • 989.752.4275 • Fax 989.752.4444 • www.glastender.com

All faucets are certified low lead compliant

Product Information

(see FR Spec Sheet for complete details)

Standard Features: All stainless steel construction • Foamed-in-place insulation • 6″ diameter seamless welded draining dipper well and faucet • Six-foot grounded cord and plug provided • 24″ wide models hold one 3-gallon container • 36″ wide models hold two 3-gallon containers • One-piece seamless top and backsplash

Electrical: 120V, 1 phase, 60 Hz, 4.75 full load amps • Dedicated 15 amp circuit is recommended • Includes 6-foot grounded cord and plug

Refrigeration: Operating range -5°F to 10°F • 1/4 HP, R290 refrigerant

Capacity: FRA-24 and FRB-24 models hold one 3-gallon container • FRA-36 and FRB-36 models hold two 3-gallon containers

*NOTE: Ice Cream Freezers are manufactured to order and are not returnable



FRA-24

19″ Deep Ice Cream Freezers

Model	List	Length	Weight
FRA-24	$6,921	24″	140#
FRA-36	$7,924	36″	175#

24″ Deep Ice Cream Freezers

Model	List	Length	Weight
FRB-24	$7,132	24″	150#
FRB-36	$8,135	36″	185#

Accessories

Model	Description	List	Wgt
SSR-24	24″ single speed rail	$331	7#
SSR-36	36″ single speed rail	$384	12#
DSR-24	24″ double speed rail	$644	14#
DSR-36	36″ double speed rail	$753	24#
CE-220/50S	Convert self-contained unit to 220V/50Hz electrical	$322	N/A



FRM-2-C

*NOTE: Mobile Freezers are manufactured to order and are not returnable



FRM-2



FRM-2-C
Elevation Height

Product Information

(see FRM Spec Sheet for complete details)

Standard Features: All stainless steel exterior with 16 gauge galvanized exterior bottom • Completely integrated design - not just a cabinet with separate drop-in module • All stainless steel interior liner with radius corners for easy cleaning • One-piece, seamless top • 36-3/8" high work surface • Includes four 4-1/8" casters, with two locking casters • Eight-foot grounded cord and plug provided, exits at rear • Designed to accommodate outlet behind unit and still sit flush against the wall

Capacity:

- FRM-2 - two 3-gallon tubs of ice cream
- FRM-2-C - 1.27 cubic feet craft ice

Electrical: 120V, 1 phase, 60Hz, 3.5 full load amps. Dedicated 15 amp circuit is required.

Refrigeration: 1/4 HP, 0.06 Ton, R290 100g (3.53 oz) refrigerant

Mobile Freezers

Model	List	Length	Depth	Weight
FRM-2	$7,566	24″	18″	150#
FRM-2-C	$8,405	14″	24″	150#

Accessories

Model	Description	List
CE-220/50S	Convert self-contained unit to 220V/50Hz electrical	$322

Configurable Options

FRM-2-C Elevation Height	No charge

All faucets are certified low lead compliant

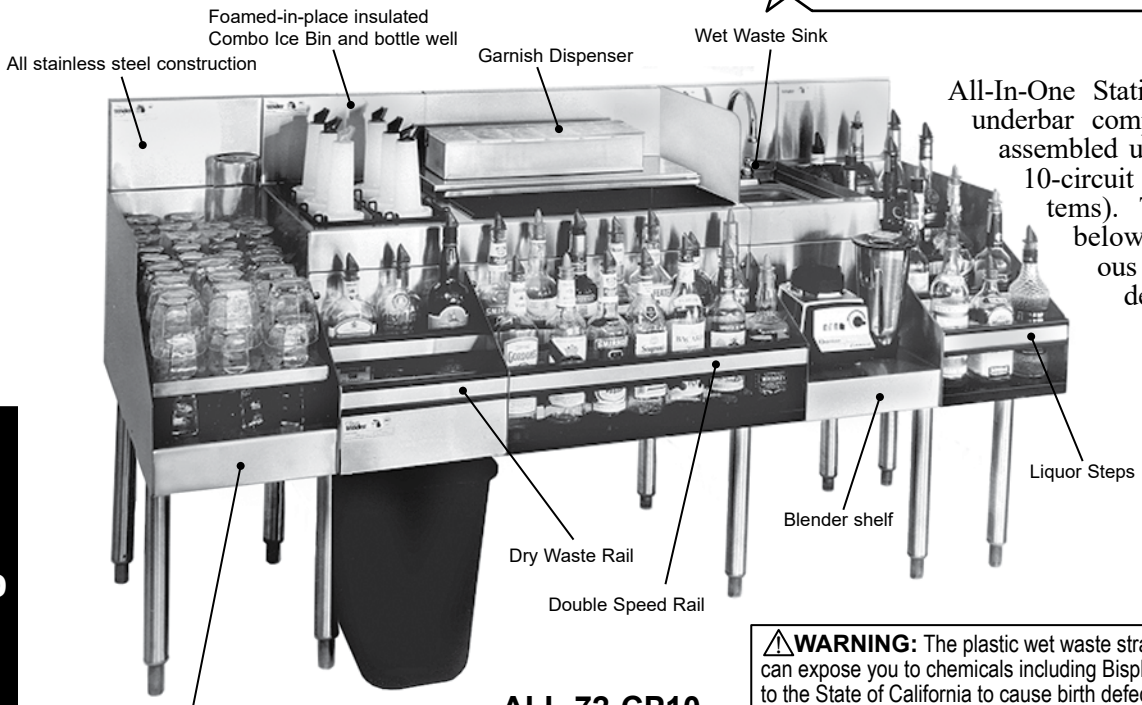

ALL-72-CP10

All-In-One Stations combine different underbar components into one pre-assembled unit (also available with 10-circuit cold plate for soda systems). The ALL-72 pictured below illustrates the various components. Read the descriptions below each model for a complete list of standard components. (see ALL Spec Sheet for complete details)

⚠**WARNING:** The plastic wet waste strainer included with this product can expose you to chemicals including Bisphenol A (BPA), which is known to the State of California to cause birth defects or other reproductive harm. For more information, go to www.P65Warnings.ca.gov. **Warning applies to State of California only.** Part #03000483

All-In-One Station Accessory

Model	Description	List	Weight
TC-BS	Tubing chase centered in backsplash of ice bin	$84	N/A

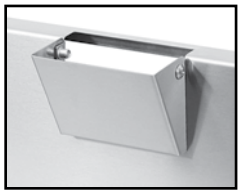

TC-BS

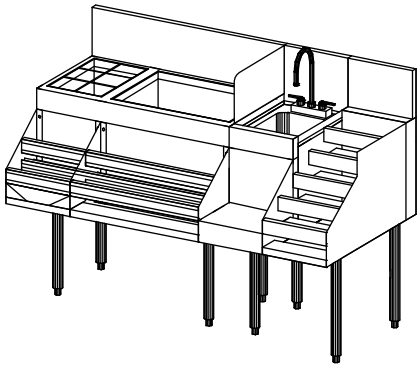

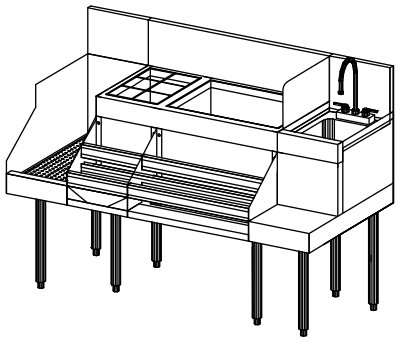

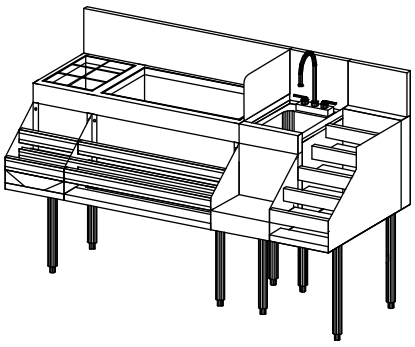

ALL-60A

Model	List	Wt	Cold Plate
ALL-60A	$9,985	200#	No
ALL-60A-CP10	$12,351	270#	Yes

60″ All-In-One Station

- 36″ Combo Ice Bin
- 12″ Single Wet Waste Sink w/Left Splash
- 12″ Blender Shelf with Towel Ring
- 12″ Liquor Steps
- 36″ Double Speed Rail
- 12″ Dry Waste Rail
- Garnish Dispenser

ALL-60B

Model	List	Wt	Cold Plate
ALL-60B	$9,371	200#	No
ALL-60B-CP10	$11,737	270#	Yes

60″ All-In-One Station

- 12″ Recessed Drainboard
- 36″ Combo Ice Bin
- 12″ Single Wet Waste Sink w/Left Splash
- 12″ Blender Shelf with Towel Ring
- 36″ Double Speed Rail
- 12″ Dry Waste Rail
- Garnish Dispenser

ALL-66A

Model	List	Wt	Cold Plate
ALL-66A	$10,323	215#	No
ALL-66A-CP10	$12,781	285#	Yes

66″ All-In-One Station

- 42″ Combo Ice Bin
- 12″ Single Wet Waste Sink w/Left Splash
- 12″ Blender Shelf with Towel Ring
- 12″ Liquor Steps
- 42″ Double Speed Rail
- 12″ Dry Waste Rail
- Garnish Dispenser

*NOTE: All-In-One Stations are manufactured to order and are not returnable

Glastender

Glastender, Inc. • 5400 North Michigan Road • Saginaw, MI • 48604-9780
800.748.0423 • 989.752.4275 • Fax 989.752.4444 • www.glastender.com

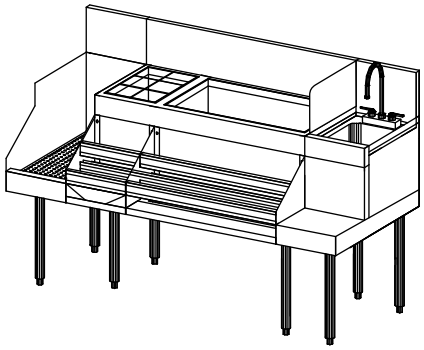

ALL-66B

Model	List	Wt	Cold Plate
ALL-66B	$9,709	215#	No
ALL-66B-CP10	$12,167	285#	Yes

66″ All-In-One Station

- 12″ Recessed Drainboard
- 42″ Combo Ice Bin
- 12″ Single Wet Waste Sink w/Left Splash
- 12″ Blender Shelf with Towel Ring
- 42″ Double Speed Rail
- 12″ Dry Waste Rail
- Garnish Dispenser

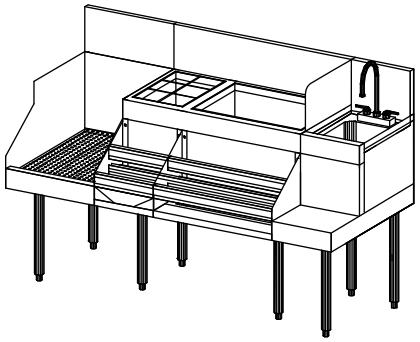

ALL-66C

Model	List	Wt	Cold Plate
ALL-66C	$9,589	215#	No
ALL-66C-CP10	$11,955	285#	Yes

66″ All-In-One Station

- 18″ Recessed Drainboard
- 36″ Combo Ice Bin
- 12″ Single Wet Waste Sink w/Left Splash
- 12″ Blender Shelf with Towel Ring
- 36″ Double Speed Rail
- 12″ Dry Waste Rail
- Garnish Dispenser

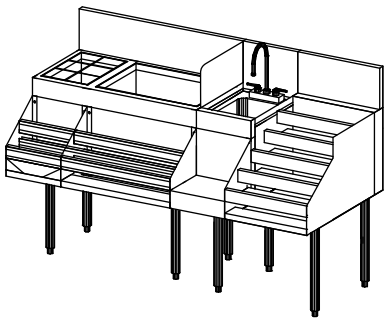

ALL-66D

Model	List	Wt	Cold Plate
ALL-66D	$10,208	215#	No
ALL-66D-CP10	$12,574	285#	Yes

66″ All-In-One Station

- 36″ Combo Ice Bin
- 12″ Single Wet Waste Sink w/Left Splash
- 12″ Blender Shelf with Towel Ring
- 18″ Liquor Steps
- 36″ Double Speed Rail
- 12″ Dry Waste Rail
- Garnish Dispenser

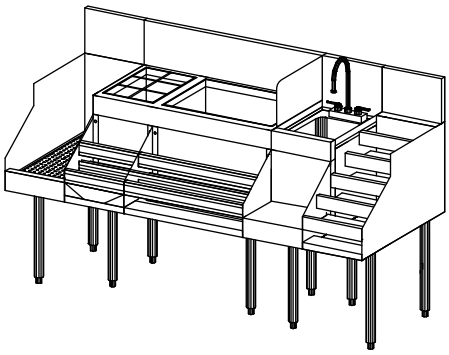

ALL-72

Model	List	Wt	Cold Plate
ALL-72	$11,647	240#	No
ALL-72-CP10	$14,013	310#	Yes

72″ All-In-One Station

- 12″ Recessed Drainboard
- 36″ Combo Ice Bin
- 12″ Single Wet Waste Sink w/Left Splash
- 12″ Blender Shelf with Towel Ring
- 12″ Liquor Steps
- 36″ Double Speed Rail
- 12″ Dry Waste Rail
- Garnish Dispenser

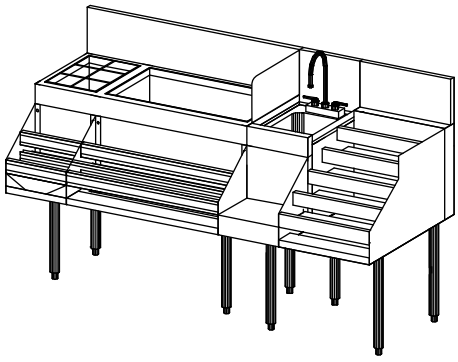

ALL-72A

Model	List	Wt	Cold Plate
ALL-72A	$10,546	240#	No
ALL-72A-CP10	$13,004	310#	Yes

72″ All-In-One Station

- 42″ Combo Ice Bin
- 12″ Single Wet Waste Sink w/Left Splash
- 12″ Blender Shelf with Towel Ring
- 18″ Liquor Steps
- 42″ Double Speed Rail
- 12″ Dry Waste Rail
- Garnish Dispenser

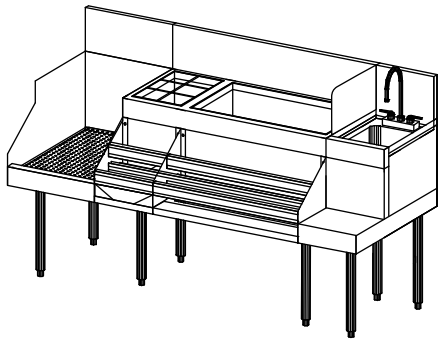

ALL-72B

Model	List	Wt	Cold Plate
ALL-72B	$9,927	240#	No
ALL-72B-CP10	$12,385	310#	Yes

72″ All-In-One Station

- 18″ Recessed Drainboard
- 42″ Combo Ice Bin
- 12″ Single Wet Waste Sink w/Left Splash
- 12″ Blender Shelf with Towel Ring
- 42″ Double Speed Rail
- 12″ Dry Waste Rail
- Garnish Dispenser

*NOTE: All-In-One Stations are manufactured to order and are not returnable

⚠**WARNING:** The plastic wet waste strainer included with this product can expose you to chemicals including Bisphenol A (BPA), which is known to the State of California to cause birth defects or other reproductive harm. For more information, go to www.P65Warnings.ca.gov.
Warning applies to State of California only. Part #03000483

Tubing Chases*

Pricing effective January 1, 2027



TCA shown in an installation setting

Product Information

(see TC Spec Sheet for complete details)

Standard Features

- All stainless steel construction
- Tubing chase is 6″ by 6″ by 4″ high
- Stainless steel drain pan work surface and perforated insert
- Mounts between adjacent underbar equipment (there is no provision for leg mounting)
- Includes front rail and front skirt to match adjacent equipment
- Can be set in place after beverage lines are installed

Tubing Chases

Model	List	Length	Depth	Weight
TCA	$808	6″	19″	17#
TCB	$918	6″	24″	19#

*NOTE: Tubing Chases are manufactured to order and are not returnable

Beer Drainers*

Pricing effective January 1, 2027

Beer Drainers have a 26″ high lowered work surface and are designed specifically for use with undercounter-mounting beverage dispensers. The work surface includes a drain pan with perforated insert to serve as the drip pan for the dispenser and a special notched rear deck for beverage line access. Since the rear work surface is notched, the beverage lines can be installed prior to the beer drainer.



BDB-18 shown in an installation setting with undercounter-mounting beer tower above

Product Information

(see BD Spec Sheet for complete details)

Standard Features

- All stainless steel construction
- Designed with lowered work surface to work in conjunction with undercounter-mounting beverage dispensers
- Adjustable stainless steel bullet feet
- Rear deck with tubing chase notch allows beer lines to be installed prior to beer drainer
- Front drain pan with lift-out stainless steel perforated insert

19″ Deep Beer Drainers

Model	List	Length	Weight
BDA-18	$1,434	18″	45#
BDA-24	$1,571	24″	50#
BDA-30	$1,705	30″	55#
BDA-36	$1,840	36″	60#

24″ Deep Beer Drainers

Model	List	Length	Weight
BDB-18	$1,569	18″	55#
BDB-24	$1,732	24″	60#
BDB-30	$1,888	30″	65#
BDB-36	$2,044	36″	70#

*NOTE: Beer Drainers are manufactured to order and are not returnable

Glastender®
Glastender, Inc. • 5400 North Michigan Road • Saginaw, MI • 48604-9780
800.748.0423 • 989.752.4275 • Fax 989.752.4444 • www.glastender.com

With the Glastender Modular Bar Die, underbar equipment is mounted to and supported on the bar die. All the underbar equipment is pre-assembled and mounted to the bar die at the factory, then broken down into shippable sections. Installation of the bar die is very simple - easier than a conventional style underbar with a millwork bar die. The result is a beautiful, innovative underbar line up that is sealed to the floor, stainless from floor to bar top, eliminates all underbar leg sets, and hides the soda, beer, electrical, and plumbing lines.

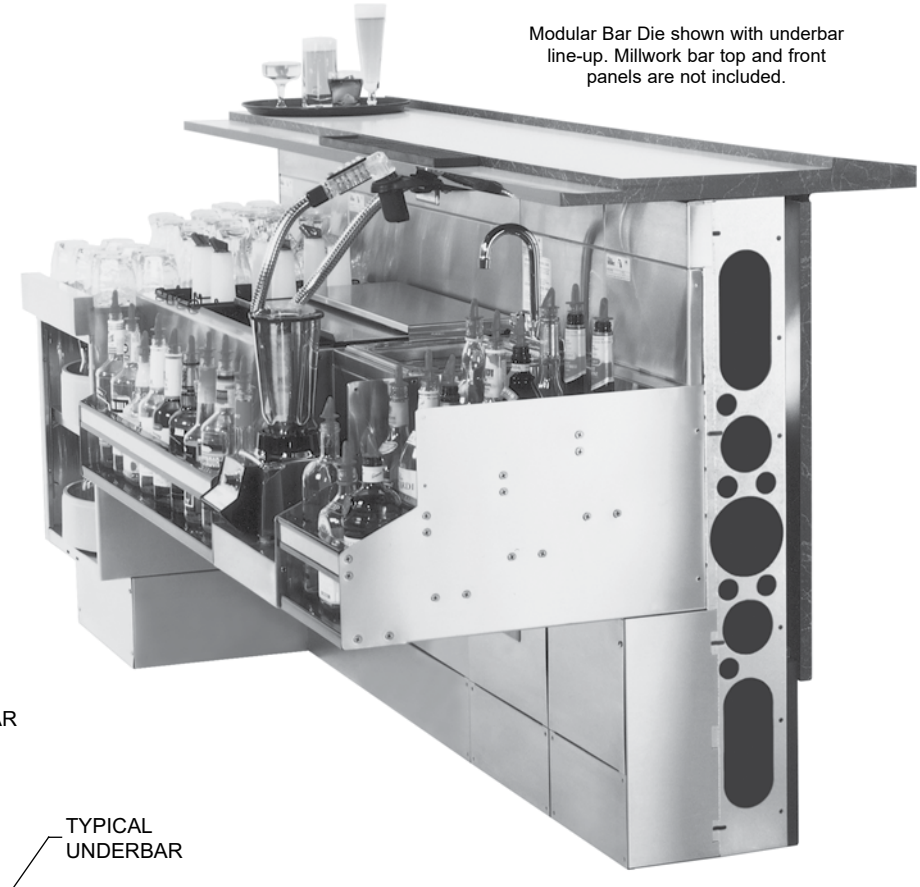

Modular Bar Die shown with underbar line-up. Millwork bar top and front panels are not included.

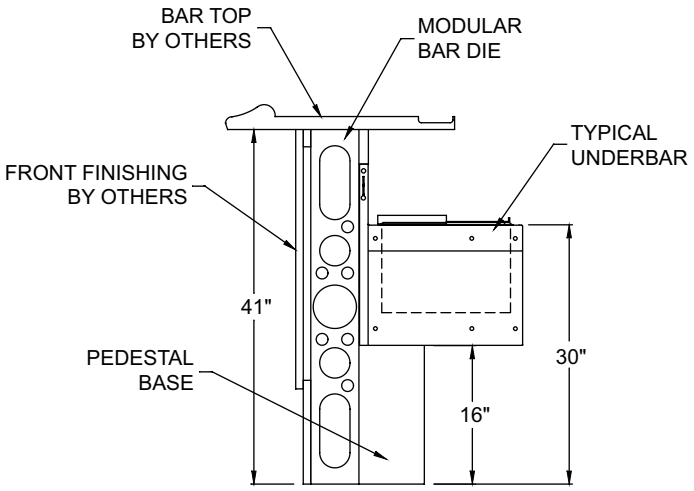

Typical Side Elevation View

The total Number of feet required is calculated by determining the overall outside dimension of the bar die wall. Please round up to the nearest whole foot.

Modular Bar Die

Model	Description	List	Wgt
MD	Price per foot	$531	15#
MDT	48" wide vinyl template - price per foot	$38	

Product Information

(see MD Spec Sheet for complete details)

Features:

- 16 gauge galvanized steel structure with stainless steel bartender side finishing
- 20A GFI outlets built in to bar die wall based on customer preference (wiring not provided)
- LED lights built in to bar die wall above underbar equipment (wiring not provided)
- Built in chaseways for beer, soda, plumbing, and electrical lines.

Benefits:

- Stainless steel from floor to bar top on bartender side
- Floor can be sealed to the bar die to prevent moisture from seeping from the bartender side to the customer side of the bar
- Galvanized steel structure will not rot
- Built in chaseways hide beer, soda, plumbing, and electrical lines for a cleaner, more attractive bar
- Arrives pre-assembled from factory in sections up to 6 feet long for easy installation - lowers installation costs. Just bolt the sections together, level, and attach the floor.
- Pre-engineered to exact dimensions to ensure a precise fit
- Can be used in conjunction with removable front millwork finishing panels to provide easy access to soda, beer, plumbing, and electrical lines for future modification, maintenance, or repair
- Millwork bar top and front panels can be pre-fabricated and easily attached
- Eliminates all underbar legs for easy cleaning.

Elevation Work Center

Pricing effective January 1, 2027



E-WC-24
with full-extension
bar tool drawer

Product Information

(see E-WC Spec Sheet for complete details)

- All stainless steel construction
- Work surface consists of a drainboard top with drain pan and separate perforated insert for better air circulation
- Full extension bar tool drawer
- One piece, seamless top and backsplash featuring 1/4″ radius corners for easy cleaning
- Roll-out bottom shelf and one roll-out intermediate shelf
- (2) 20 amp GFI outlets
- Intermediate shelf and floor are still removable after unit is plumbed and include radius corners for easy cleaning
- Smooth interior walls for easy cleaning and a finished appearance
- All storage is on a level plane
- Adjustable stainless steel bullet feet

Elevation Work Center

Model	List	Lenght	Weight
E-WC-24	$5,806	24″	125#

Elevation Ice Bin

Pricing effective January 1, 2027

Product Information

(see E-IB Spec Sheet for complete details)

- All stainless steel construction
- One-piece, seamless top and backsplash
- PVC plastic breaker strip around ice bin liner: creates 5/16″ raised edge around liner, acts as thermal barrier to prevent heat transfer, and makes the cover slide easier
- Sliding stainless steel cover
- Eco friendly foamed-in-place insulation has zero impact on global warming or ozone depletion
- Adjustable stainless steel bullet feet
- Lower cabinet with locking door
- Ten circuit available with all 24″ and wider models (add suffix ‘-CP10’ to model number); includes 4″ soda gun holder
- Single speed rail



E-IB-24

Elevation Ice Bin Cabinets

Model	List	Length	Weight	Ice Capacity
E-IB-12	$4,139	12″	74#	33#
E-IB-18	$4,483	18″	91#	50#
E-IB-24	$5,110	24″	107#	67#
E-IB-30	$5,762	30″	125#	84#
E-IB-36	$6,361	36″	142#	100#

With 10-Circuit Cold Plate

Model	List	Length	Weight	Ice Capacity
E-IB-24-CP10	$8,810	24″	194#	67#
E-IB-30-CP10	$9,722	30″	216#	84#
E-IB-36-CP10	$10,753	36″	242#	100#

ELEVATION BY GLASTENDER
Glastender, Inc. • 5400 North Michigan Road • Saginaw, MI • 48604-9780
800.748.0423 • 989.752.4275 • Fax 989.752.4444 • www.glastender.com

Elevation Blender Stations



E-BS-12

Product Information

(see E-BS Spec Sheet for complete details)

- All stainless steel
- One-piece seamless top and backsplash featuring 1/4″ radius corners
- Eco-friendly, foamed-in-place insulated blender shelf
- Heavy-duty, hot and cold water faucet
- Lift-out perforated plastic sink strainer
- Blender shelf with radius interior corners
- Power cord access hole with grommet on front skirt
- Junction box for duplex GFI outlet underneath blender shelf (outlet not included)
- Adjustable stainless steel bullet feet
- E-BS-18 model includes push-down rinser faucet

Elevation Blender Stations

Model	List	Length	Weight
E-BS-12	$4,071	12″	68#
E-BS-18	$5,175	18″	85#

Pricing effective January 1, 2027

Elevation Fusion Tool Rinsing



E-FTR8

Product Information

(see E-FTR8 Spec Sheet for complete details)

- All stainless steel
- One-piece seamless top and backsplash featuring 1/4″ radius corners
- Push-down rinser faucet with 4-1/2" plunger plate, 6″ diameter seamlessly welded draining dipper well and faucet
- Lift-out perforated plastic strainer for lower wet waste sink
- Adjustable stainless steel bullet feet

Elevation Fusion Tool Rinsing

Model	List	Length	Weight
E-FTR8	$4,725	8″	74#

Elevation Corner Inside Rectangle Drainboards

Pricing effective January 1, 2027

Product Information

(see E-CIR Spec Sheet for complete details)

• All stainless steel • Designed to mount between two adjacent pieces of Glastender underbar equipment (unless optional legs are used, see confirgurable options) • Drain pan with separate perforated insert for better air circulation • 1/4″ radius work surface corners for easy cleaning



E-CIR-24/24-N

Elevation Corner Inside Rectangle Drainboards

Model	List	Left	Right	Weight
E-CIR-24/24	$1,789	24″	24″	75#
E-CIR-24/24-N	$1,894	24″	24″	75#
E-CIR-24/24-LN	$1,840	24″	24″	75#
E-CIR-24/30L	$1,934	30″	24″	90#
E-CIR-24/30R	$1,934	24″	30″	90#

Configurable Leg Set Options

Applicable Model	Description	List
E-CIR, E-CIR-N, E-CIR-LN	Leg set, one-side mounting	$155
E-CIR	Leg set, freestanding	$465

PLAN VIEWS

E-CIR-24/24

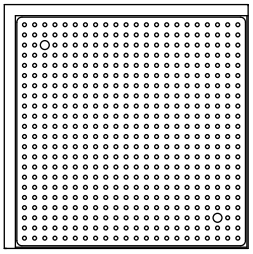

E-CIR-24/24-N

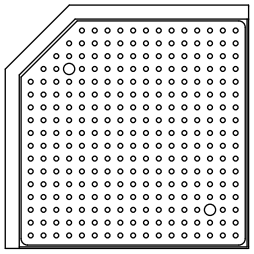

E-CIR-24/24-LN

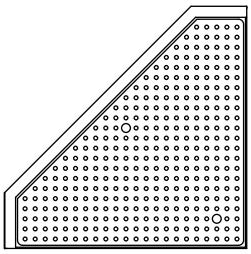

Elevation Corner Inside L Shape Drainboards

Pricing effective January 1, 2027

Product Information

(see E-CIL Spec Sheet for complete details)

• All stainless steel • Designed to mount between two adjacent pieces of Glastender underbar equipment (unless optional legs are used, see configurable options) • Drain pan with separate perforated insert for better air circulation • 1/4″ radius work surface corners for easy cleaning



E-CIL-24

Elevation Corner Inside L Shape Drainboards

Model	List	Depth	Turn	Weight
E-CIL	$2,304	24″	Inside	75#
E-CIL-LN	$2,319	24″	Inside	75#

Corner Inside and L Shape Drainboards are for 90° inside turns.

Configurable Leg Set Options

Applicable Model	Description	List
E-CIL and E-CIL-N	Leg set, one-side mounting	$155
E-CIL	Leg set, freestanding	$465

PLAN VIEWS

E-CIL

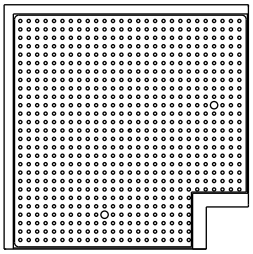

E-CIL-LN

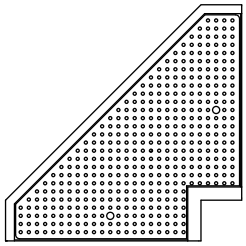

ELEVATION BY GLASTENDER

Glastender, Inc. • 5400 North Michigan Road • Saginaw, MI • 48604-9780
800.748.0423 • 989.752.4275 • Fax 989.752.4444 • www.glastender.com



E-CIW-15



E-COW-15

Does your Corner Drainboard need a leg set?

Corner drainboards are designed to be attached between two pieces of underbar, or two stable vertical surfaces and do not include legs. If attached to equipment or surface on only one side, a leg set for one-side mounting is needed. Some models can also be converted to freestanding using the applicable leg set. See table for applicable models.

Sample Corner Inside and Outside Wedge Drainboard Plan Views

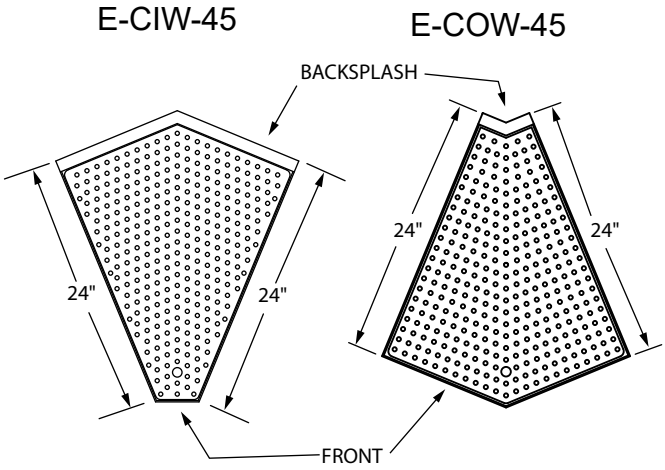

Product Information

(see E-CIW & E-COW Spec Sheets for complete details)

- All stainless steel
- Designed to mount between two adjacent pieces of Glastender underbar equipment (unless optional legs are used, see configurable options)
- Drain pan with separate perforated insert for better air circulation (5° and 10° E-CIW models excluded)
- 1/4″ radius work surface corners for easy cleaning

Configurable Leg Set Options

Applicable Model	Description	List
E-CIW	Leg set, one-side mounting (5° and 10° models excluded)	$155
E-COW	Leg set, one-side mounting	$155

Elevation Corner Wedge Inside Turn Drainboards

Model	List	Degree	Turn	Weight
E-CIW-75	$2,570	75°	Inside	75#
E-CIW-60	$2,176	60°	Inside	68#
E-CIW-45	$1,894	45°	Inside	60#
E-CIW-30	$1,645	30°	Inside	56#
E-CIW-25	$1,579	25°	Inside	56#
E-CIW-20	$1,516	20°	Inside	53#
E-CIW-15	$1,454	15°	Inside	53#
E-CIW-10	$869	10°	Inside	41#
E-CIW-5	$846	5°	Inside	37#

Elevation Corner Wedge Outside Turn Drainboards

Model	List	Degree	Turn	Weight
E-COW-75	$2,851	75°	Outside	75#
E-COW-60	$2,382	60°	Outside	68#
E-COW-45	$1,993	45°	Outside	60#
E-COW-30	$1,769	30°	Outside	56#
E-COW-15	$1,549	15°	Outside	53#

Elevation Ice-Chilled Cocktail Prep Station

Pricing effective January 1, 2027



E-ICP-24

Product Information

(see E-ICP Spec Sheet for complete details)

- All stainless steel construction
- PVC plastic breaker strip around ice bin liner: creates 5/16″ raised edge around liner, acts as thermal barrier to prevent heat transfer
- Ice-chilled garnish rail for six 1/9 pans (4″ deep)
- Bottle rail for eight elixir bottles
- Removable cutting board
- Cabinet base with hinged door
- Six 1/9 pans with lids included
- Eco-friendly foamed-in-place insulation has zero impact on global warming or ozone depletion
- Adjustable stainless steel bullet feet

Elevation Cocktail Prep Station

Model	List	Length	Weight
E-ICP-24	$6,128	24″	115#

Elevation Drainboard Glassracks

Pricing effective January 1, 2027



E-DBGR-24

Product Information

(see E-DBGR Spec Sheet for complete details)

- All stainless steel construction
- Adjustable stainless steel bullet feet
- One piece, seamless top and backsplash featuring 1/4″ radius corners for easy cleaning
- Work surface consists of a drainboard top with drain pan and separate perforated insert for better air circulation
- Floor is still removable after unit is plumbed and includes radius corners for easy cleaning
- Smooth interior walls for easy cleaning and a finished appearance
- All storage is on a level plane

Elevation Drainboard Glassracks

Model	List	Length	Weight
E-DBGR	$4,414	24″	110#

Configurable Options

Model	List
Roll-out shelves	No Charge
Rack slides	No Charge

ELEVATION BY GLASTENDER

Glastender, Inc. • 5400 North Michigan Road • Saginaw, MI • 48604-9780
800.748.0423 • 989.752.4275 • Fax 989.752.4444 • www.glastender.com

Elevation Drainboards



E-DB-24

Product Information

(see E-DB Spec Sheet for complete details)

- All stainless steel construction
- Adjustable stainless steel bullet feet
- One-piece, seamless top and backsplash featuring 1/4″ radius corners for easy cleaning
- Door(s) features integral handle and lock(s) standard
- Work surface consists of a drainboard top with drain pan and separate perforated insert for better air circulation.
- Intermediate shelf and floor are still removable after unit is plumbed and include radius corners
- Plumbing connection is made underneath the unit and does not interfere with shelf or floor
- Smooth interior walls for easy cleaning and a finished appearance
- All storage is on a level plane

Elevation Drainboard Glassracks

Model	List	Length	Weight
E-DB-12	$3,018	12″	94#
E-DB-18	$3,405	18″	105#
E-DB-24	$3,831	24″	116#
E-DB-30	$4,352	30″	127#
E-DB-36	$4,705	36″	138#
E-DB-42	$5,013	42″	149#
E-DB-48	$5,431	48″	160#

Pricing effective January 1, 2027

Elevation POS Cabinets



E-PC-18



E-PC-24

Product Information

(see E-PC Spec Sheet for complete details)

- All stainless steel construction with adjustable bullet feet
- One-piece, seamless top and back-splash
- Louvered door features integral handle
- Door lock standard
- Grommeted cord access hole in work surface
- Large access hole in back wall of unit
- Smooth interior walls for easy cleaning and a finished appearance

Elevation POS Cabinet

Model	List	Length	Weight
E-PC-18	$3,797	18″	85#
E-PC-24	$4,135	24″	95#

Configurable Options

E-PC-18 with enclosed cash drawer cubby	$478
E-PC-24 with enclosed cash drawer cubby	$527



E-LD-12

Product Information

(see E-LD Spec Sheet for complete details)

- All stainless steel
- Two (2) levels of liquor bottle storage
- Bottle retaining rails
- Open step-and-rail design
- Extra-wide steps for specialty liquor bottles
- Full extension locking liquor drawer with dividers
- Adjustable stainless steel bullet feet

Configurable Option

- Locking Cover - The removable locking cover is one-piece and foldable for easy storage.

NOTE: Locking covers must be specified at time of order, cannot be added in the field.

Elevation Liquor Steps

	Without Locking Cover		With Locking Cover		
Model	List	Weight	List	Weight	Length
E-LD-8	$4,556	55#	$5,445	55#	8″
E-LD-12	$4,754	70#	$5,676	70#	12″
E-LD-18	$5,040	85#	$6,016	85#	18″

ELEVATION BY GLASTENDER

Glastender, Inc. • 5400 North Michigan Road • Saginaw, MI • 48604-9780
800.748.0423 • 989.752.4275 • Fax 989.752.4444 • www.glastender.com



E-DW-14
Front Access

Product Information

(see E-DW Spec Sheet for complete details)

- All stainless steel
- 36″ high work surface
- Free standing with two leg sets and hinged access door

Elevation Dry Waste Cabinet

Model	List	Length	Weight
E-DW-14	$3,034	14″	67#

Configurable Options

Access	
Front access	No charge
Top access	No charge
Drainboard Top	
Front access only	$473

Accessories

Model	Description	List	Wt
03000497	Rubbermaid Slim Jim® trash receptacle - top access	$311	10#
03022158	Trash receptacle, 10 gallon, gray - front access	$142	7#



E-SW-14

Product Information

(see E-SW Spec Sheet for complete details)

• All stainless steel • One-piece seamless top and backsplash featuring 1/4″ radius corners • Drawn sink bowl • Heavy-duty, hot and cold water faucet • Lift-out perforated plastic wet waste strainer • Adjustable stainless steel bullet feet • Front-hinged access door • 6″ round trash chute in work surface for access to trash receptacle (not included)

Elevation Waste Sink

Model	List	Length	Weight
E-SW-14	$4,254	14″	85#

Accessories

Model	Description	List	Wt
03005491	Trash receptacle, 28½ qt, gray plastic	$92	5#

Product Information

(see E-HS Spec Sheet for complete details)

• All stainless steel • One-piece seamless top and backsplash featuring 1/4″ radius corners • Drawn sink bowl • Heavy-duty, hot and cold water faucet • Adjustable stainless steel bullet feet • Includes soap dispenser and front-flush C-fold paper towel dispenser • E-HS-14 includes a trash receptacle

Elevation Hand Sink

Model	List	Length	Weight
E-HS-12	$4,307	12″	70#
E-HS-14	$4,187	14″	75#



E-HS-14



E-FS12

Product Information

(see E-FS12 Spec Sheet for complete details)

• All stainless steel • One-piece seamless top and backsplash featuring 1/4″ radius corners • Two drawn sink bowls • Upper hand sink that drains into lower wet waste sink • Heavy-duty, hot and cold water faucet • Backsplash faucet mounting bracket for easy faucet removal • Soap dispenser and front-flush C-fold paper towel dispenser • Lift-out perforated plastic strainer for lower wet waste sink • Left and right side splashes • Adjustable stainless steel bullet feet

Elevation Fusion Sink

Model	List	Length	Weight
E-FS12	$4,943	12″	75#

Glastender, Inc. • 5400 North Michigan Road • Saginaw, MI • 48604-9780
800.748.0423 • 989.752.4275 • Fax 989.752.4444 • www.glastender.com

Product Information

(see E-DS, E-TS, and E-FS Spec Sheets for complete details)

• All stainless steel construction & stainless steel bullet feet • 18 gauge stainless steel one-piece seamless top, front rail and backsplash featuring 1/4″ radius corners for easy cleaning • 16 gauge stainless steel fabricated sink bowls • 11″ by 14″ by 10-1/4″ deep sink bowl with hot and cold water faucet • Faucets are standard and ship mounted • Extra wide sink bowl easily accommodates brush washer • Models have lift-out stainless steel perforated insert for better air circulation • Perforated stainless steel inserts are available to cover sinks when not in use • One over-flow tube per sink bowl included • 30″ work height



E-DS-48

Elevation Two Compartment Sink Cabinet

Model	List	Length	Weight
E-DS-48	$11,351	48″	180#



E-TS-60

Elevation Three Compartment Sink Cabinet

Model	List	Length	Weight
E-TS-60	$12,137	60″	210#



E-FS-72

Elevation Four Compartment Sink Cabinet

Model	List	Length	Weight
E-FS-72	$13,489	72″	245#

19" Deep Ice Bins*

Model	List	Lth	Wgt	Ice Capacity
C-IBA-6†	$1,375	6″	40#	17#
C-IBA-12	$1,856	12″	50#	33#
C-IBA-18	$2,052	18″	60#	50#
C-IBA-24	$2,235	24″	70#	67#
C-IBA-30	$2,437	30″	80#	84#
C-IBA-36	$2,627	36″	90#	100#
C-IBA-42	$2,826	42″	100#	117#
C-IBA-48	$3,017	48″	110#	134#
With 10-Circuit Cold Plate				
C-IBA-24-CP10	$4,205	24″	130#	67#
C-IBA-30-CP10	$4,470	30″	145#	84#
C-IBA-36-CP10	$4,809	36″	160#	100#
C-IBA-42-CP10	$5,408	42″	170#	117#
C-IBA-48-CP10	$5,615	48″	180#	134#

† Note: 6″ unit cannot be freestanding

24" Deep Ice Bins*

Model	List	Lth	Wgt	Ice Capacity
C-IBB-6†	$1,468	6″	45#	21#
C-IBB-12	$1,995	12″	55#	42#
C-IBB-18	$2,204	18″	70#	64#
C-IBB-24	$2,407	24″	80#	85#
C-IBB-30	$2,626	30″	95#	106#
C-IBB-36	$2,829	36″	110#	127#
C-IBB-42	$3,039	42″	120#	149#
C-IBB-48	$3,244	48″	130#	170#
With 10-Circuit Cold Plate*				
C-IBB-24-CP10	$4,347	24″	145#	85#
C-IBB-30-CP10	$5,159	30″	160#	106#
C-IBB-36-CP10	$5,385	36″	170#	127#
C-IBB-42-CP10	$5,614	42″	185#	149#
C-IBB-48-CP10	$5,782	48″	195#	170#

† Note: 6″ unit cannot be freestanding

What is a cold plate?

Choice ice bins 24″ wide and larger are available with a 10-circuit cold plate built into the bottom liner. A cold plate is an aluminum block with ten stainless steel lines or circuits molded within. Soda lines are attached by the soda vendor to the input and output lines of the cold plate and the soda water and syrup are chilled as they pass through the lines. A cold plate is recommended for ice bins used to make cocktails.



C-IBA-36-CP10

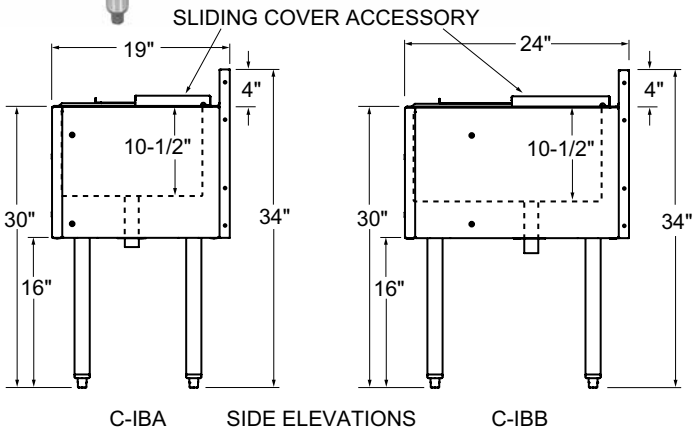

C-IBA SIDE ELEVATIONS C-IBB

Product Information

(see C-IB and C-IB-ED Spec Sheets for complete details)

Standard Features

- All stainless steel construction
- PVC plastic breaker strip around ice bin liner acts as a thermal barrier to prevent heat transfer
- 24″ deep version provides larger ice bin not just a deck extension on the back of the 19″ deep model
- Extra deep ice bins have 14-1/2″ deep liner for extra ice capacity
- Adjustable stainless steel bullet feet
- Backsplash is an open channel to provide access for beverage lines

NOTE: Ice bins intended to store potable ice must be ordered with an ice bin cover to maintain the sanitation listing

*NOTE: These ice bin models are manufactured to order and are not returnable



Bottle well accessory
(two BW3 shown)

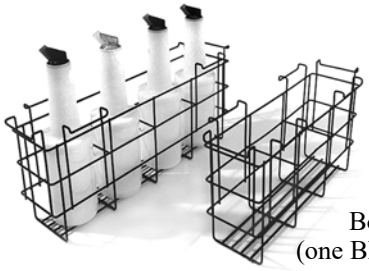

Bottle rack accessory
(one BR4 and one BR3 shown)

CHOICE BY GLASTENDER

Glastender, Inc. • 5400 North Michigan Road • Saginaw, MI • 48604-9780
800.748.0423 • 989.752.4275 • Fax 989.752.4444 • www.glastender.com

19" Extra Deep Ice Bins*

Model	List	Lth	Wgt	IceCapacity
C-IBA-18-ED	$2,286	18″	75#	69#
C-IBA-24-ED	$2,513	24″	80#	92#
C-IBA-30-ED	$2,738	30″	90#	116#
C-IBA-36-ED	$2,964	36″	100#	139#
C-IBA-42-ED	$3,190	42″	110#	162#
C-IBA-48-ED	$3,420	48″	125#	185#
Extra Deep With 10-Circuit Cold Plate*				
C-IBA-24-CP10-ED	$4,660	24″	140#	92#
C-IBA-30-CP10-ED	$4,968	30″	155#	116#
C-IBA-36-CP10-ED	$5,417	36″	170#	139#
C-IBA-42-CP10-ED	$6,020	42″	180#	162#
C-IBA-48-CP10-ED	$6,270	48″	190#	185#

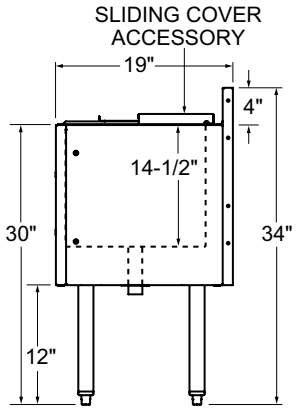

C-IBA-ED
SIDE ELEVATION

NOTE: Ice bins intended to store potable ice must be ordered with an ice bin cover to maintain the sanitation listing

*NOTE: These ice bin models are manufactured to order and are not returnable

Ice Bin Accessories

Single Speed Rails

Model	Description	List	Wgt
C-SR-12	12″ single speed rail	$215	5#
C-SR-18	18″ single speed rail	$238	6#
C-SR-24	24″ single speed rail	$261	7#
C-SR-30	30″ single speed rail	$284	9#
C-SR-36	36″ single speed rail	$308	10#
C-SR-42	42″ single speed rail	$331	12#
C-SR-48	48″ single speed rail	$354	13#

Double Speed Rails

Model	Description	List	Wgt
C-DR-12	12″ double speed rail	$433	9#
C-DR-18	18″ double speed rail	$474	11#
C-DR-24	24″ double speed rail	$516	14#
C-DR-30	30″ double speed rail	$557	16#
C-DR-36	36″ double speed rail	$600	18#
C-DR-42	42″ double speed rail	$642	21#
C-DR-48	48″ double speed rail	$683	24#

Garnish Dispenser Stainless steel garnish dispenser with hinged plexi-glass lid and six 16 oz. plastic cups.

CCD	Garnish dispenser	$253	5#

Accessories for 19″ Deep (A) Ice Bins

Accessories for 24″ Deep (B) Ice Bins

Ice Bin Covers Two-piece sliding stainless steel. Ice bins intended to store potable ice must be ordered with an ice bin cover to maintain the sanitation listing. If bottle wells are ordered, deduct 6″ from cover length for one bottle well and 12″ for two bottle wells.

Model	Description	List	Wgt	Model	Description	List	Wgt
IBCA-12	12″w ice bin cover - 19″d (A) ice bin	$138	4#	IBCB-12	12″w ice bin cover - 24″d (B) ice bin	$152	5#
IBCA-18	18″w ice bin cover - 19″d (A) ice bin	$167	5#	IBCB-18	18″w ice bin cover - 24″d (B) ice bin	$189	6#
IBCA-24	24″w ice bin cover - 19″d (A) ice bin	$199	7#	IBCB-24	24″w ice bin cover - 24″d (B) ice bin	$226	8#
IBCA-30	30″w ice bin cover - 19″d (A) ice bin	$229	8#	IBCB-30	30″w ice bin cover - 24″d (B) ice bin	$263	10#
IBCA-36	36″w ice bin cover - 19″d (A) ice bin	$272	9#	IBCB-36	36″w ice bin cover - 24″d (B) ice bin	$316	11#
IBCA-42	42″w ice bin cover - 19″d (A) ice bin	$306	10#	IBCB-42	42″w ice bin cover - 24″d (B) ice bin	$356	13#
IBCA-48	48″w ice bin cover - 19″d (A) ice bin	$337	12#	IBCB-48	48″w ice bin cover - 24″d (B) ice bin	$396	15#

Bottle Wells For use with potable ice. May be positioned left or right inside cocktail ice bin. If two are ordered, they are positioned one at each side

BW3	3 bottle well for 19″d (A) ice bin	$84	4#	BW4	4 bottle rack for 24″d (B) ice bin	$154	5#

Bottle Racks For use with non-potable ice in bottle storage ice bin. Only fit in 12″ long and larger ice bins. One rack may be ordered for each 6″ of ice bin length. Not for use with sliding cover.

BR3	Bottle rack for 19″d (A) ice bin	$116	3#	BR4	4 bottle rack for 24″d (B) ice bin	$141	4#

Ice Bin Dividers Stainless steel panel placed inside the ice bin front-to-back to separate different types of ice.

IBD-H-A	Ice bin divider for 19″d (A) ice bin	$124	4#	IBD-H-B	Ice bin divider for 24″d (B) ice bin	$158	4#
IBD-H-A-ED	Ice Bin divider for 19″d (A) extra deep ice bin	$145	4#				



C-CBA-36L

NOTE: Ice bins intended to store potable ice must be ordered with an ice bin cover to maintain the sanitation listing

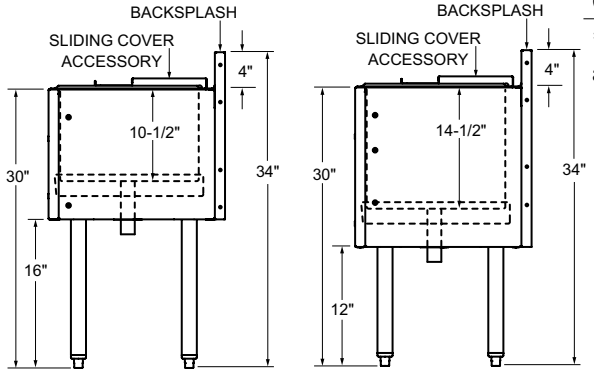

C-CBA C-CBA-ED

SIDE ELEVATIONS

Product Information

(see C-CB and C-CB-ED Spec Sheets for complete details)

Standard Features

- All stainless steel construction
- PVC plastic breaker strip around ice bin liner acts as a thermal barrier to prevent heat transfer
- Extra deep ice bins have 14-1/2″ deep liner for extra ice capacity
- Adjustable stainless steel bullet feet
- Backsplash is an open channel to provide access for beverage lines

What is a cold plate?

Choice ice bins 24″ wide and larger are available with a 10-circuit cold plate built into the bottom liner. A cold plate is an aluminum block with ten stainless steel lines or circuits molded within. Soda lines are attached by the soda vendor to the input and output lines of the cold plate and the soda water and syrup are chilled as they pass through the lines. A cold plate is recommended for ice bins used to make cocktails.

19" Deep Combo Ice Bins*

Model	List	Lth	Wgt	Ice Capacity	Bottles Stored
C-CBA-36L or R	$3,362	36″	100#	67#	6
C-CBA-42L or R	$3,569	42″	110#	84#	6
C-CBA-48L or R	$3,776	48″	120#	100#	6
C-CBA-48	$4,315	48″	120#	67#	12
With 10-Circuit Cold Plate					
C-CBA-30L3 or R3-CP10*	$5,424	30″	160#	67#	3
C-CBA-36L or R-CP10	$5,601	36″	170#	67#	6
C-CBA-42L or R-CP10	$5,883	42″	180#	84#	6
C-CBA-48L or R-CP10	$6,249	48″	200#	100#	6
C-CBA-48-CP10	$6,645	48″	200#	67#	12
Extra Deep Combo Ice Bins With 10-Circuit Cold Plate*					
C-CBA-30L3 or R3-CP10-ED	$5,800	30″	170#	92#	3
C-CBA-36L or R-CP10-ED	$5,978	36″	180#	92#	6
C-CBA-42L or R-CP10-ED	$6,300	42″	190#	116#	6
C-CBA-48L or R-CP10-ED	$6,705	48″	210#	139#	6
C-CBA-48-CP10-ED	$7,114	48″	210#	92#	12

*NOTE: These ice bin models are manufactured to order and are not returnable

Combo Ice Bin Accessories

Single Speed Rails

Model	Description	List	Wgt
C-SR-30	30″ single speed rail	$284	9#
C-SR-36	36″ single speed rail	$308	10#
C-SR-42	42″ single speed rail	$331	12#
C-SR-48	48″ single speed rail	$354	13#
Double Speed Rails			
C-DR-30	30″ double speed rail	$557	16#
C-DR-36	36″ double speed rail	$600	18#
C-DR-42	42″ double speed rail	$642	21#
C-DR-48	48″ double speed rail	$683	24#

Garnish Dispenser Stainless steel garnish dispenser with hinged plexi-glass lid and six 16 oz. plastic cups.			
CCD	Garnish dispenser	$253	5#
Ice Bin Covers Two-piece sliding stainless steel. Ice bins intended to store potable ice must be ordered with an ice bin cover to maintain the sanitation listing.			
IBCA-24	24″w ice bin cover for C-CBA-30, C-CBA-36, or C-CBA-48	$199	7#
IBCA-30	30″w ice bin cover for C-CBA-42	$229	8#
IBCA-36	36″w ice bin cover for C-CBA-48L or R	$272	9#
Bottle Rack Vinyl-coated wire racks placed inside the bottle well to assist with holding pour and store bottles. Each combo ice bin bottle well may hold two BR3 bottle racks. NOTE: BR3 does not fit in C-CBA-30.			
BR3	Bottle rack for 19″d (A) ice bin	$116	3#
Ice Bin Dividers Stainless steel panel placed inside the ice bin front-to-back to separate different types of ice.			
IBD-H-A	Ice bin divider for 19″d (A) ice bin	$124	4#
IBD-H-A-ED	Ice bin divider for 19″d (A) extra deep ice bin	$145	4#

Glastender, Inc. • 5400 North Michigan Road • Saginaw, MI • 48604-9780
800.748.0423 • 989.752.4275 • Fax 989.752.4444 • www.glastender.com



C-IB-38X24

A 24″ wide by 38″ deep pass-thru ice bin is used to provide the cocktail servers with access to the ice. Pass-thru ice bins have the same features as standard ice bins, except there is no backsplash and the optional sliding cover is double sided. The bartender side of the ice bin lines up with the underbar equipment the same as a standard ice bin. The 38″ deep dimension also allows a pass-thru ice bin to line up with back-to-back mounted underbar equipment (see sample drawings).

Pass Thru Ice Bin			
Model	**List**	**Wgt**	**Ice Capacity**
C-IB-38X24*	$3,727	100#	175#
With 10-Circuit Cold Plate			
C-IB-38X24-CP10	$5,893	190#	175#

*NOTE: This model is manufactured to order and is not returnable

NOTE: Ice bins intended to store potable ice must be ordered with an ice bin cover to maintain the sanitation listing

Product Information

(see CB-IB-38x24 Spec Sheet for complete details)

Standard Features

- For pass thru design applications allowing both bartender and cocktail server access
- All stainless steel construction
- PVC plastic breaker strip around ice bin liner acts as a thermal barrier to prevent heat transfer
- Adjustable stainless steel bullet feet

Pass Thru Ice Bin Accessories			
Model	**Description**	**List**	**Wgt**
C-SR-24	24″ single speed rail	$261	7#
C-DR-24	24″ double speed rail	$516	14#
C-IBC-38X24	Three-piece sliding stainless steel cover	$388	14#
C-BW6-38X24	Set of two BW3 bottle wells with four-piece stainless steel sliding cover for C-IB-38X24	$577	20#
CCD	Garnish dispenser, stainless steel with hinged plexi-glass lid and six 16 oz. cups	$253	5#
IBD-H-P	Ice bin divider for C-IB-38X24	$206	4#
IBD-H-P-CP	Ice bin divider for C-IB-38X24-CP10	$222	4#
IBD-H-P-LR	Ice bin divider, left to right, for C-IB-38X24	$158	4#

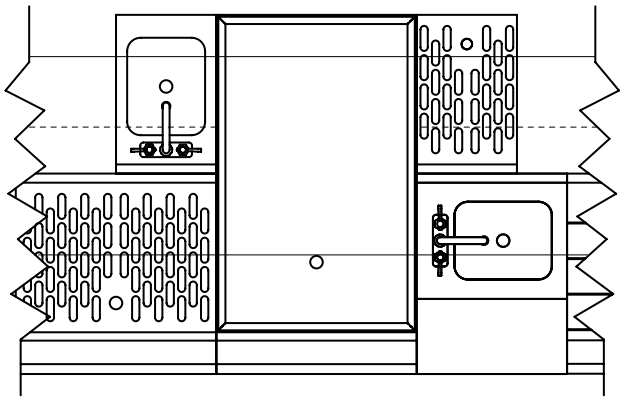

BARTENDER SIDE

Underbar Plan View with Pass-Thru Ice Bin and Back-to-Back Mounted Underbar

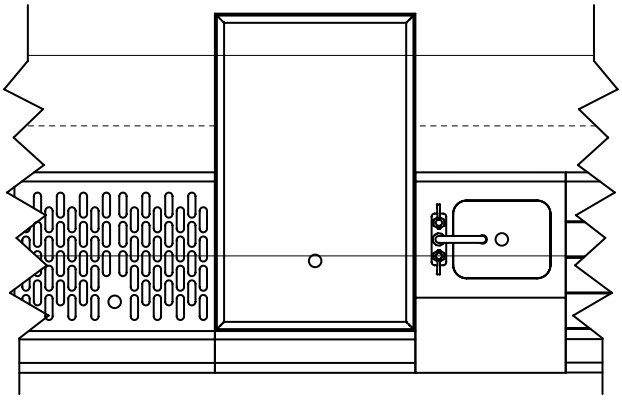

BARTENDER SIDE

Underbar Plan View with Pass-Thru Ice Bin

Patented. For more information visit: https://www.glastender.com/patents



C-SHA-6

Model	List	Length	Weight
19″ Deep Soda Gun Holders			
C-SHA-4	$889	4″	22#
C-SHA-4-ED	$945	4″	24#
C-SHA-6	$933	6″	25#
C-SHA-6-ED	$995	6″	27#
24″ Deep Soda Gun Holders			
C-SHB-4	$943	4″	22#
C-SHB-4-ED*	$1,012	4″	24#
C-SHB-6	$987	6″	25#
C-SHB-6-ED*	$1,060	6″	27#
38″ Deep Pass Thru Soda Gun Holders			
C-SHP-4*	$1,483	4″	32#
C-SHP-4-ED*	$1,581	4″	34#
C-SHP-6*	$1,569	6″	35#
C-SHP-6-ED*	$1,674	6″	37#

*NOTE: These items are manufactured to order and are not returnable

Product Information

(see C-SH Spec Sheet for complete details)

Standard Features

- All stainless steel construction
- Designed to house the manifold of Wunder-Bar® or Schroeder America™ 8 to 14 button soda guns
- Includes integral drip pan with radius corners for easy cleaning
- Built-in holder for soda gun
- Top cover is removable for access to the soda manifold
- Allows you to dictate the soda gun location
- Eliminates the need for tubing bundles above the work surface
- Designed to mount to at least one other piece of underbar equipment (there is no provision for leg mounting)
- Pre-aligned mounting holes and bolts ensure a secure and exact fit when mounting adjoining units
- Extra deep "-ED" models available to align with extra-deep style ice bins

CHOICE BY GLASTENDER

Glastender, Inc. • 5400 North Michigan Road • Saginaw, MI • 48604-9780
800.748.0423 • 989.752.4275 • Fax 989.752.4444 • www.glastender.com

Choice Soda Manifold Housings



C-SMHA-6



C-SMHA-6 with top cover removed and soda manifold installed

*NOTE: These items are manufactured to order and are not returnable

19″ Deep Soda Manifold Housings			
Model	**List**	**Length**	**Weight**
C-SMHA-4	$619	4″	20#
C-SMHA-4-ED*	$664	4″	22#
C-SMHA-6*	$662	6″	23#
C-SMHA-6-ED*	$713	6″	25#
24″ Deep Soda Manifold Housings			
C-SMHB-4*	$657	4″	24#
C-SMHB-4-ED*	$737	4″	26#
C-SMHB-6*	$703	6″	28#
C-SMHB-6-ED*	$790	6″	30#
38″ Deep Pass Thru Manifold Housing			
C-SMHP-4*	$1,039	4″	35#
C-SMHP-4-ED*	$1,127	4″	37#
C-SMHP-6*	$1,119	6″	38#
C-SMHP-6-ED*	$1,212	6″	40#

Product Information

(see C-SMH Spec Sheet for complete details)

Standard Features

- All stainless steel construction
- Designed to house the manifold of Wunder-Bar® or Schroeder America™ 8 to 14 button soda guns
- Once installed, the top of the housing is 34″ high
- Top cover is removable for access to the soda manifold
- Eliminates the need for tubing bundles above the work surface
- Mounts to an adjacent piece of Choice underbar (there is no provision for leg mounting)
- The soda gun drip cup supplied by the soda gun manufacturer mounts to the underside of your bar top
- Extra deep "-ED" models available to align with extra-deep style ice bins



UMGH



Undercounter Mount Gun Holder		
Model	**List**	**Wgt**
UMGH	$181	3#

14 gauge stainless steel with rubber grommet and plastic drip pan. Grommet is specially sized to properly hold both Wunder-Bar® and Schroeder America™ style soda guns. Includes 10′ of drain line tube.

Choice Tubing Chases*



C-TCA

*NOTE: Choice Tubing Chases are manufactured to order and are not returnable

Product Information

(see C-TC Spec Sheet for complete details)

Standard Features

- All stainless steel construction
- Tubing chase is 5-1/2″ x 6″ x 4″ high
- Mounts between adjacent underbar equipment (there is no provision for leg mounting)
- Can be set in place after beverage lines are installed

Tubing Chases				
Model	**List**	**Length**	**Depth**	**Weight**
C-TCA	$614	6″	19″	20#
C-TCB	$697	6″	24″	24#



C-BSA-12

Product Information

(see C-BS and C-FBS Spec Sheets for complete details)

Standard Features

- All stainless steel construction
- One-piece seamless top and backsplash
- Adjustable stainless steel bullet feet
- Sink models have 9-1/4″ by 11-1/2″ by 6″ deep sink bowl with hot and cold water faucet.
- Blender shelf features radius interior corners for easy cleaning
- Power cord access hole with grommet located on front skirt, behind the blender
- 24″ deep models have a 9″ deep shelf
- 29″ deep models have a 10″ deep shelf
- Junction box for duplex GFI outlet mounted underneath blender shelf (outlet not included)



C-FBSA-12

24″ Deep Blender Stations

Model	List	Length	Weight
C-BSA-12	$2,196	12″	48#
C-BSA-14	$2,173	14″	50#
C-BSA-18L †*	$2,265	18″	55#
C-BSA-18R †*	$2,265	18″	55#

29″ Deep Blender Stations

Model	List	Length	Weight
C-BSB-12*	$2,321	12″	53#
C-BSB-14*	$2,369	14″	55#
C-BSB-18*	$2,476	18″	60#

† Denotes faucet location as left or right

24″ Deep Fillerboard Blender Stations

Model	List	Length	Weight
C-FBSA-12*	$1,266	12″	40#
C-FBSA-14*	$1,301	14″	42#
C-FBSA-18*	$1,353	18″	45#

29″ Deep Fillerboard Blender Stations

Model	List	Length	Weight
C-FBSB-12*	$1,303	12″	45#
C-FBSB-14*	$1,342	14″	47#
C-FBSB-18*	$1,396	18″	50#

*NOTE: These blender stations are manufactured to order and are not returnable



Optional foot-operated faucets

FOF-B
- C-BSA-12

FOF-D
- C-BSA-14
- C-BSA-18L
- C-BSA-18R
- C-BSB-12
- C-BSB-14
- C-BSB-18



C-BBS-12

Additional blender shelf space can be added to standard underbar units by specifying a Choice Bolt-on Blender Shelf. Choice Bolt-on Blender Shelves are 10″ deep and include a junction box for duplex outlet (outlet not included) mounted below the shelf.

Choice Bolt-on Blender Shelves

Model	Description	List	Wgt
C-BBS-12	12″ bolt-on blender shelf	$383	12#
C-BBS-18	18″ bolt-on blender shelf	$414	18#

Configurable Options

Model	Description	List	Wgt
FOF-B	Convert C-BSA-12 to foot-operated backsplash faucet	$725	3#
FOF-D	Convert C-BSA-14, C-BSA-18L, C-BSA-18R, C-BSB-12, C-BSB-14, and C-BSB-18 to foot-operated deck faucet	$553	3#

Accessories

Model	Description	List	Wgt
03000483	Wet waste sink strainer	$73	1#
C-LS15-F	Left side splash for 24″d blender station	$197	4#
C-RS15-F	Right side splash for 24″d blender station	$197	4#
C-LSA-F	Left side splash for 29″d blender station	$197	4#
C-RSA-F	Right side splash for 29″d blender station	$197	4#
TR	Towel ring	$26	1#

⚠**WARNING:** The plastic wet waste strainer included with this product can expose you to chemicals including Bisphenol A (BPA), which is known to the State of California to cause birth defects or other reproductive harm. For more information, go to www.P65Warnings.ca.gov.
Warning applies to State of California only. Part #03000483

Glastender, Inc. • 5400 North Michigan Road • Saginaw, MI • 48604-9780
800.748.0423 • 989.752.4275 • Fax 989.752.4444 • www.glastender.com

Choice Fillerboards*



C-FBB-24

Choice Fillerboards are constructed of all stainless steel and include a flat work surface for situations where a draining work surface is not desired. Fillerboards are not typically used for glass storage, but are more commonly used as a place to set a printer, POS system, or cash drawer.

19″ Deep Fillerboards			
Model	**List**	**Length**	**Weight**
C-FBA-18	$1,154	18″	40#
C-FBA-24	$1,259	24″	45#
24″ Deep Fillerboards			
C-FBB-18	$1,292	18″	45#
C-FBB-24	$1,426	24″	50#

*NOTE: Fillerboards are manufactured to order and are not returnable

Product Information

(see C-FB Spec Sheet for complete details)

Standard Features

- All stainless steel construction
- Adjustable stainless steel bullet feet
- One-piece seamless top and backsplash

Fillerboard Accessories			
Model	**Description**	**List**	**Wgt**
C-SR-18	18″ single speed rail	$238	6#
C-SR-24	24″ single speed rail	$261	7#
C-DR-18	18″ double speed rail	$474	11#
C-DR-24	24″ double speed rail	$516	14#
C-LSA-F	Left side splash for C-FBA models	$197	4#
C-RSA-F	Right side splash for C-FBA models	$197	4#
C-LSB-F	Left side splash for C-FBB models	$229	5#
C-RSB-F	Right side splash for C-FBB models	$229	5#

Choice Recessed Drainboards*



C-RBD-18

Product Information

(see C-RDB Spec Sheet for complete details)

Standard Features

- All stainless steel construction
- Adjustable stainless steel bullet feet
- One-piece seamless top and backsplash featuring 1/4″ radius corners for easy cleaning
- Corrugated work surface
- Lift-out stainless steel perforated shelf for stacking glassware

*NOTE: Recessed drainboards are manufactured to order and are not returnable

Recessed Drainboards			
Model	**List**	**Length**	**Weight**
C-RDB-12	$1,353	12″	50#
C-RDB-18	$1,503	18″	55#
C-RDB-24	$1,662	24″	60#

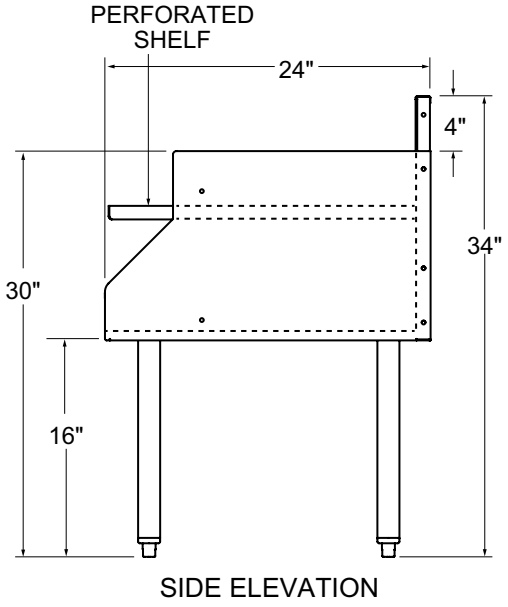

SIDE ELEVATION

Recessed drainboards have the same corrugated work surface as normal drainboards except the work surface has been lowered to allow stacking of glassware. A perforated shelf is placed on top of the first level of glassware and a second layer of glassware is stacked on top of it. Recessed drainboards work best when only one style of glassware is being stored.



C-DBB-12

Product Information

(see C-DB Spec Sheet for complete details)

Standard Features

- All stainless steel construction
- Adjustable stainless steel bullet feet
- Corrugated work surface
- One-piece seamless top and backsplash featuring 1/4″ radius corners for easy cleaning
- Standard models available in 6″ incremental lengths from 12″ to 48″
- 24″ deep models provide a larger drainboard storage area not just a deck extension on the back of the 19″ deep model

19″ Drainboards			
Model	**List**	**Length**	**Weight**
C-DBA-12	$1,115	12″	45#
C-DBA-18	$1,202	18″	50#
C-DBA-24	$1,291	24″	55#
C-DBA-30*	$1,379	30″	60#
C-DBA-36*	$1,467	36″	65#
C-DBA-42*	$1,556	42″	70#
C-DBA-48*	$1,643	48″	75#
24″ Drainboards			
C-DBB-12	$1,201	12″	50#
C-DBB-18	$1,301	18″	55#
C-DBB-24	$1,400	24″	60#
C-DBB-30*	$1,500	30″	65#
C-DBB-36*	$1,598	36″	70#
C-DBB-42*	$1,697	42″	75#
C-DBB-48*	$1,797	48″	80#

Drainboard Accessories			
Model	**Description**	**List**	**Weight**
C-SR-12	12″ single speed rail	$215	5#
C-SR-18	18″ single speed rail	$238	6#
C-SR-24	24″ single speed rail	$261	7#
C-SR-30	30″ single speed rail	$284	9#
C-SR-36	36″ single speed rail	$308	10#
C-SR-42	42″ single speed rail	$331	12#
C-SR-48	48″ single speed rail	$354	13#
C-DR-12	12″ double speed rail	$433	9#
C-DR-18	18″ double speed rail	$474	11#
C-DR-24	24″ double speed rail	$516	14#
C-DR-30	30″ double speed rail	$557	16#
C-DR-36	36″ double speed rail	$600	18#
C-DR-42	42″ double speed rail	$642	21#
C-DR-48	48″ double speed rail	$683	24#
C-LSA-D	Left side splash for C-DBA models	$197	4#
C-RSA-D	Right side splash for C-DBA models	$197	4#
C-LSB-D	Left side splash for C-DBB models	$229	5#
C-RSB-D	Right side splash for C-DBB models	$229	5#

*NOTE: These items are manufactured to order and are not returnable

CHOICE BY GLASTENDER

Glastender, Inc. • 5400 North Michigan Road • Saginaw, MI • 48604-9780
800.748.0423 • 989.752.4275 • Fax 989.752.4444 • www.glastender.com

Choice Corner Inside Rectangle Drainboards

Corner Inside Rectangle Drainboards are for 90° inside turns only. The dimensions of the corner are specified in the model number. If the dimensions of each side are not the same, the longest dimension is specified second along with its location.

Corner drainboards are designed to mount between two pieces of Choice underbar. However, they can also be mounted between any two stable vertical surfaces. Corners should not be mounted to objects that are mobile or on casters.

Configurable leg set options are available for one-side mounting. Because they are intended to mount between two vertical surfaces, corner drainboards do not come standard with legs. If one side of the corner does not have a vertical surface on which to mount, then a leg set must be ordered.



C-CIR-19/24-L

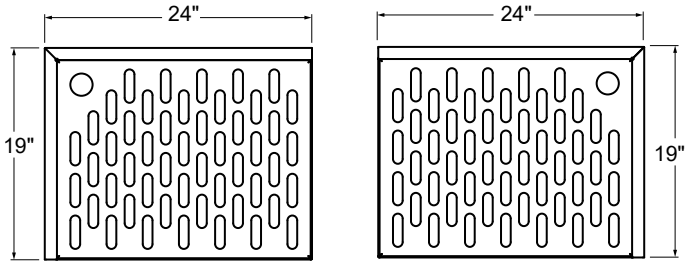

C-CIR-19/24L C-CIR-19/24R

PLAN VIEWS

Corner Inside Rectangle Drainboards

Model	List	Left	Right	Weight
C-CIR-19/19*	$1,254	19″	19″	40#
C-CIR-19/24L*	$1,322	24″	19″	45#
C-CIR-19/24R*	$1,322	19″	24″	45#
C-CIR-19/30L*	$1,403	30″	19″	50#
C-CIR-19/30R*	$1,403	19″	30″	50#
C-CIR-24/24	$1,398	24″	24″	50#
C-CIR-24/30L	$1,486	30″	24″	55#
C-CIR-24/30R	$1,486	24″	30″	55#

CORNER INSIDE RECTANGLE DRAINBOARDS
WITH CHAMFERED BACK CORNER



C-CIR-19/19-N

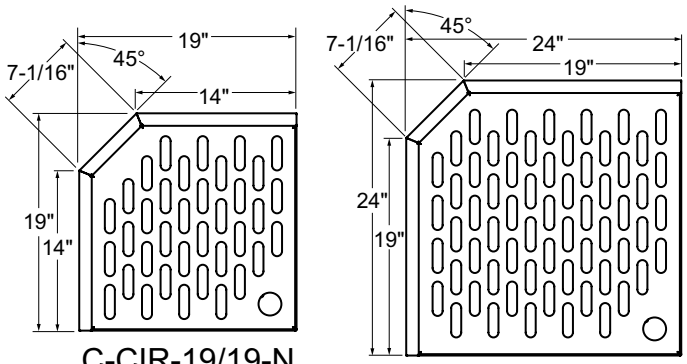

C-CIR-19/19-N C-CIR-24/24-N

PLAN VIEWS

Corner Inside Rectangle Drainboards With Chamfered Back Corner

C-CIR-19/19-N*	$1,294	19″	19″	40#
C-CIR-24/24-N*	$1,432	24″	24″	50#
C-CIR-24/24-LN*	$1,318	24″	24″	45#

Product Information

(see C-CIR Spec Sheet for complete details)

Standard Features

- All stainless steel construction
- Designed to mount between two adjacent pieces of Choice underbar equipment
- Corrugated work surface features 1/4″ radius corners for easy cleaning

Configurable Leg Set Option

Description	List
Leg set, one-side mounting	$155

*NOTE: These items are manufactured to order and are not returnable

Corner outside wedge drainboards and inside wedge fillerboards are 24″ deep and designed to mount between two pieces of Choice underbar. However, they can be mounted between any two stable vertical surfaces. Corners should not be mounted to objects that are mobile or on casters.

Configurable leg set options are available for one-side mounting for C-COWB-45 and C-CIWB-45 only. Because they are intended to mount between two vertical surfaces, these models do not come standard with legs. If one side of either C-COWB-45 or C-CIWB-45 does not have a vertical surface on which to mount, then a leg set must be ordered.



C-COWB-45



C-CIWB-15

24″ Deep Corner Outside Wedge Drainboards

Model	List	Degree	Turn	Weight
C-COWB-45	$1,223	45°	Outside	40#

*NOTE: Choice Corner Outside Wedge Drainboards are manufactured to order and are not returnable

Product Information

(see C-COW Spec Sheet for complete details)

Standard Features

- All stainless steel construction
- Designed to mount between two adjacent pieces of Choice underbar equipment
- Corrugated work surface features 1/4″ radius corners for easy cleaning

24″ Deep Corner Inside Wedge Fillerboards

Model	List	Degree	Turn	Weight
C-CIWB-5	$496	5°	Inside	25#
C-CIWB-10	$521	10°	Inside	27#
C-CIWB-15	$677	15°	Inside	29#
C-CIWB-20	$695	20°	Inside	31#
C-CIWB-25	$713	25°	Inside	33#
C-CIWB-30	$732	30°	Inside	35#
C-CIWB-45	$1,250	45°	Inside	38#

*NOTE: Choice Corner Inside Wedge Fillerboards are manufactured to order and are not returnable

Product Information

(see C-CIWB Spec Sheet for complete details)

Standard Features

- All stainless steel construction
- Designed to mount between two adjacent pieces of Choice underbar equipment
- Flat work surface excluding 45° model which features a corrugated work surface

Configurable Leg Set Option

Applicable Model	Description	List
C-COWB-45	Leg set, one-side mounting	$155
C-CIWB-45	Leg set, one-side mounting	$155

CHOICE BY GLASTENDER
Glastender, Inc. • 5400 North Michigan Road • Saginaw, MI • 48604-9780
800.748.0423 • 989.752.4275 • Fax 989.752.4444 • www.glastender.com

Choice Open Glassracks*

Glassracks are designed to hold racks of glassware stacked on top of each other. The 24″ wide model holds 20″ by 20″ racks and the 18″ wide models hold the 16″ round racks used with the Glastender GT-18 glasswashers. Optional shelves are available as an accessory.

*NOTE: Choice Open Glassracks are manufactured to order and are not returnable

Product Information

(see C-GR Spec Sheet for complete details)

Standard Features

- All stainless steel construction
- Adjustable stainless steel bullet feet
- Full bottom shelf includes drain



C-GRA-24

19″ Deep Open Glassracks			
Model	**List**	**Length**	**Weight**
C-GRA-18	$1,452	18″	55#
C-GRA-24	$1,620	24″	65#
24″ Deep Open Glassracks			
C-GRB-18	$1,664	18″	65#
C-GRB-24	$1,845	24″	75#

Open Glassrack Accessory			
Model	**Description**	**List**	**Weight**
03013601	Shelf kit for 18″ wide model, includes two shelves and eight clips	$536	7#
03013602	Shelf kit for 24″ wide model, includes two shelves and eight clips	$557	8#



24″ SHELF

Choice Drainboard Glassracks



C-DBG3-24

Drainboard Glassracks are designed to hold racks for glassware. All models are 24″ deep. The 24″ wide model holds 20″ by 20″ racks and the 18″ wide model holds the 16″ round racks used with Glastender GT-18 glasswashers.

Product Information

(see C-DBG Spec Sheet for complete details)

Standard Features

- All stainless steel construction
- Adjustable stainless steel bullet feet
- One-piece seamless top and backsplash featuring 1/4″ radius corners for easy cleaning
- Corrugated work surface
- Includes bottom floor and two sets of rack slides for storing up to three glass racks below the work surface

NOTE: Three racks up to 7″ high or two racks up to 10-1/2″ high.

24″ Deep Drainboard Glassracks			
Model	**List**	**Length**	**Weight**
C-DBG3-18	$1,914	18″	70#
C-DBG3-24	$2,099	24″	80#

Drainboard Glassrack Accessories			
Model	**Description**	**List**	**Wgt**
C-LSB-D	Left side splash for 24″d (B) models	$229	5#
C-RSB-D	Right side splash for 24″d (B) models	$229	5#

Drainboard Cabinets have a bottom shelf and drainboard work surface. An adjustable intermediate shelf is available as an accessory. They are available with or without doors. The models with doors come with a lock standard. The 12″, 18″, and 24″ wide models only have one door and all other models have two doors.



C-DBCB-24

19″ Drainboard Cabinets*			
Model	List	Length	Weight
C-DBCA-12	$2,084	12″	65#
C-DBCA-18	$2,334	18″	75#
C-DBCA-24	$2,583	24″	85#
C-DBCA-30	$2,999	30″	95#
C-DBCA-36	$3,246	36″	105#
C-DBCA-42	$3,495	42″	115#
C-DBCA-48	$3,745	48″	125#
19″ Drainboard Cabinets Less Doors*			
C-DBCA-12-LD	$1,506	12″	59#
C-DBCA-18-LD	$1,666	18″	66#
C-DBCA-24-LD	$1,826	24″	73#
C-DBCA-30-LD	$1,987	30″	80#
C-DBCA-36-LD	$2,149	36″	87#
C-DBCA-42-LD	$2,309	42″	94#
C-DBCA-48-LD	$2,468	48″	101#
24″ Drainboard Cabinets			
C-DBCB-12	$2,078	12″	75#
C-DBCB-18	$2,330	18″	85#
C-DBCB-24	$2,580	24″	95#
C-DBCB-30*	$2,991	30″	105#
C-DBCB-36*	$3,242	36″	115#
C-DBCB-42*	$3,492	42″	125#
C-DBCB-48*	$3,746	48″	135#
24″ Drainboard Cabinets Less Doors			
C-DBCB-12-LD	$1,535	12″	69#
C-DBCB-18-LD	$1,706	18″	76#
C-DBCB-24-LD	$1,876	24″	83#
C-DBCB-30-LD*	$2,046	30″	90#
C-DBCB-36-LD*	$2,213	36″	97#
C-DBCB-42-LD*	$2,383	42″	104#
C-DBCB-48-LD*	$2,555	48″	111#

*NOTE: These items are manufactured to order and are not returnable

Product Information

(see C-DBC Spec Sheet for complete details)

Standard Features

- All stainless steel construction
- Adjustable stainless steel bullet feet
- One-piece seamless top and backsplash featuring 1/4″ radius corners for easy cleaning
- Corrugated work surface
- Lock(s) standard on models with a door(s)
- Units with a single door come hinged left, but the door is field reversible
- Plumbing connection is made underneath the unit and does not interfere with shelf or floor

Drainboard Cabinet Accessories			
Model	Description	List	Weight
03013585	Shelf kit for C-DBCA-12	$269	5#
03013586	Shelf kit for C-DBCA-18	$283	6#
03013587	Shelf kit for C-DBCA-24	$297	7#
03013588	Shelf kit for C-DBCA-30	$313	8#
03013589	Shelf kit for C-DBCA-36	$328	10#
03013590	Shelf kit for C-DBCA-42	$343	11#
03013591	Shelf kit for C-DBCA-48	$359	12#
03013592	Shelf kit for C-DBCB-12	$279	5#
03013593	Shelf kit for C-DBCB-18	$298	7#
03013594	Shelf kit for C-DBCB-24	$317	8#
03013595	Shelf kit for C-DBCB-30	$337	10#
03013596	Shelf kit for C-DBCB-36	$356	12#
03013597	Shelf kit for C-DBCB-42	$374	13#
03013598	Shelf kit for C-DBCB-48	$394	15#
C-LSA-D	Left side splash for 19″d (A) models	$197	4#
C-RSA-D	Right side splash for 19″d (A) models	$197	4#
C-LSB-D	Left side splash for 24″d (B) models	$229	5#
C-RSB-D	Right side splash for 24″d (B) models	$229	5#

Glastender, Inc. • 5400 North Michigan Road • Saginaw, MI • 48604-9780
800.748.0423 • 989.752.4275 • Fax 989.752.4444 • www.glastender.com



C-HSA-12-D



C-DHSB-12

19″ Deep Hand Sinks

Model	List	Length	Weight
C-HSA-12	$1,942	12″	45#
C-HSA-12-D	$2,313	12″	50#
19″ Deep Wet Waste Sink			
C-SWA-12	$2,015	12″	47#
24″ Deep Hand Sinks			
C-DHSB-12	$2,558	12″	60#
C-HSB-12	$2,047	12″	50#
C-HSB-12-D	$2,426	12″	55#
24″ Deep Wet Waste Sink			
C-SWB-12	$2,120	12″	52#

Product Information

(see C-DHSB, C-HS, and C-SW Spec Sheets for complete details)

⚠**WARNING:** The plastic wet waste strainer included with this product can expose you to chemicals including Bisphenol A (BPA), which is known to the State of California to cause birth defects or other reproductive harm. For more information, go to www.P65Warnings.ca.gov.
Warning applies to State of California only. Part #03000483

Configurable Options

Model	Description	List	Weight
C-LSA-D	Left side splash for 19″deep (A) models	$197	4#
C-RSA-D	Right side splash for 19″deep (A) models	$197	4#
C-LSB-D	Left side splash for 24″deep (B) models	$229	5#
C-RSB-D	Right side splash for 24″deep (B) models	$229	5#
FOF-D	Foot-operated deck faucet for C-DHSB-12, C-HSA-12, C-HSA-12-D, C-HSB-12, C-HSB-12-D, C-SWA-12, and C-SWB-12	$553	3#
KOF-D	Knee-operated deck faucet for C-HSB-12 and C-SWB-12	$572	3#



FOF-D
Optional foot-operated deck faucet

KOF-D
Optional knee-operated deck faucet



NOTE: FOF and KOF - see table for applicable models

Accessories

Model	Description	List	Weight
C-SR-12	12″ single speed rail, cannot mount to “-D” models	$215	5#
C-DR-12	12″ double speed rail, cannot mount to “-D” models	$433	9#
C-DWR-S	Dry waste rail, aligns with single speed rail, cannot mount to “-D” models	$240	5#
C-DWR-D	Dry waste rail, aligns with double speed rail, cannot mount to “-D” models	$491	9#
03000483	Wet waste sink strainer (standard on “C-SW” models)	$73	2#
03000511	Wrist handles, set of two	$61	2#
TR	Towel ring	$26	1#
DWC	Trash receptacle, stainless steel	$643	10#
03005491	Trash receptacle, 28½ qt., gray plastic	$92	5#
TD-C	Paper towel dispenser, C-fold	$352	5#
03001873	Liquid soap dispenser, hand-pump	$102	1#
03014739	Aerator, faucet, 1.5 GPM	$31	1#
03014738	Aerator, faucet, 0.5 GPM	$31	1#
03014737	Aerator, faucet, 0.2 GPM	$31	1#



03000483

All Sink Cabinets are 24″ deep and available with or without a locking door. The 12″ wide chemical storage cabinet holds three 1-gallon chemical containers. The 18″ wide dry waste cabinet holds a trash receptacle and has a 6″ round trash chute in the work surface. The trash receptacle is not included.

The two 24″ wide models include a 12″ drainboard section with corrugated work surface. A vertical center divider allows three 1-gallon chemical containers to be stored below the sink with the other side of the cabinet available for additional storage. An intermediate shelf for the cabinet storage below the drainboard is available as an accessory. The sink may be located to the left or right, which is signified by the L or R in the model number.



C-SC-12



C-SC-18



C-SC-24R

12″ Wide x 24″ Deep Sink Cabinets

Model	List	Lth	Wgt
C-SC-12	$2,933	12″	70#
C-SC-12-LD	$2,427	12″	64#

18″ Wide x 24″ Deep Sink Cabinets

Model	List	Lth	Wgt
C-SC-18	$3,116	18″	80#
C-SC-18-LD	$2,502	18″	71#

24″ Wide x 24″ Deep Sink Cabinets

Model	List	Lth	Wgt
C-SC-24L*	$3,751	24″	95#
C-SC-24R*	$3,751	24″	95#
C-SC-24L-LD*	$2,993	24″	83#
C-SC-24R-LD*	$2,993	24″	83#

* = L = Sink Left, R = Sink Right

Product Information

(see C-SC Spec Sheet for complete details)

Standard Features

- Manufactured with total welded construction to meet NSF® standards
- All stainless steel construction
- One-piece seamless top and backsplash featuring 1/4″ radius corners for easy cleaning
- Adjustable stainless steel feet
- 9-1/4″ by 11-1/2″ by 6″ deep sink bowl with hot and cold water gooseneck faucet
- Cabinet base with front hinged access door (available less door - specify "-LD" suffix in model number)

Optional foot-operated faucet

FOF-D

- C-SC-12
- C-SC-12-LD
- C-SC-18
- C-SC-18-LD
- C-SC-24L
- C-SC-24R
- C-SC-24L-LD
- C-SC-24R-LD



Configurable Options

Model	Description	List	Weight
C-LSB-D	Left side splash	$229	5#
C-RSB-D	Right side splash	$229	5#
FOF-D	Convert to foot-operated deck faucet for C-SC-12, C-SC-12-LD, C-SC-18, C-SC-18-LD, C-SC-24L, C-SC-24R, C-SC-24L-LD, & C-SC-24R-LD models	$553	3#

Accessories

Model	Description	List	Weight
03000483	Wet waste strainer	$73	2#
DWC	Trash receptacle, stainless steel, for C-SC-18 models	$643	10#
03005491	Trash receptacle, 28-1/2 qt, plastic, for C-SC-18 models	$92	5#
TR	Towel ring	$26	1#
03013600	Shelf kit for storage area below drainboard on C-SC-24 models	$292	5#
03000511	Wrist handles (set of two)	$61	2#

⚠**WARNING:** The plastic wet waste strainer included with this product can expose you to chemicals including Bisphenol A (BPA), which is known to the State of California to cause birth defects or other reproductive harm. For more information, go to www.P65Warnings.ca.gov.
Warning applies to State of California only. Part #03000483

Glastender, Inc. • 5400 North Michigan Road • Saginaw, MI • 48604-9780
800.748.0423 • 989.752.4275 • Fax 989.752.4444 • www.glastender.com

All faucets are certified low lead compliant

C-MFS-12 Mixology Unit*

Includes blacksplash faucet, a lift-out perforated plastic sink strainer, and a 8″ x 11″ cutting board that is securely mounted but easily removable for cleaning

Model	List	Lth	Wgt
C-MFS-12	$2,815	12″	55#

*NOTE: This unit is manufactured to order and is not returnable

C-MFT-8 Mixology Unit*

Includes push-down rinser faucet to rinse shaker cans, a 6″ diameter seamless welded draining dipper well and faucet for mixology tools, and a 7-1/2″ x 7-1/2″ cutting board that is securely mounted but easily removable for cleaning. NOTE: No legs. Must mount to adjacent underbar.

Model	List	Lth	Wgt
C-MFT-8	$2,844	8″	40#

*NOTE: This unit is manufactured to order and is not returnable

C-MFT-20 Mixology Unit

Includes backsplash faucet, push-down rinser faucet to rinse shaker cans, a lift-out perforated plastic sink strainer, a 6″ diameter seamless welded draining dipper well and faucet for mixology tools, a 8″ x 11″ cutting board that is securely mounted but easily removable for cleaning, and an ice scoop well

Model	List	Lth	Wgt
C-MFT-20	$4,632	20″	65#

C-MRS-12 Mixology Unit

Includes backsplash faucet, push-down rinser faucet to rinse shaker cans, and a lift-out perforated plastic sink strainer

Model	List	Lth	Wgt
C-MRS-12	$2,829	12″	55#

C-MTS-14 Mixology Unit

Includes backsplash faucet, push-down rinser faucet to rinse shaker cans, a lift-out perforated plastic sink strainer, a 6″ diameter seamless welded draining dipper well and faucet for mixology tools

Model	List	Lth	Wgt
C-MTS-14	$4,211	14″	55#

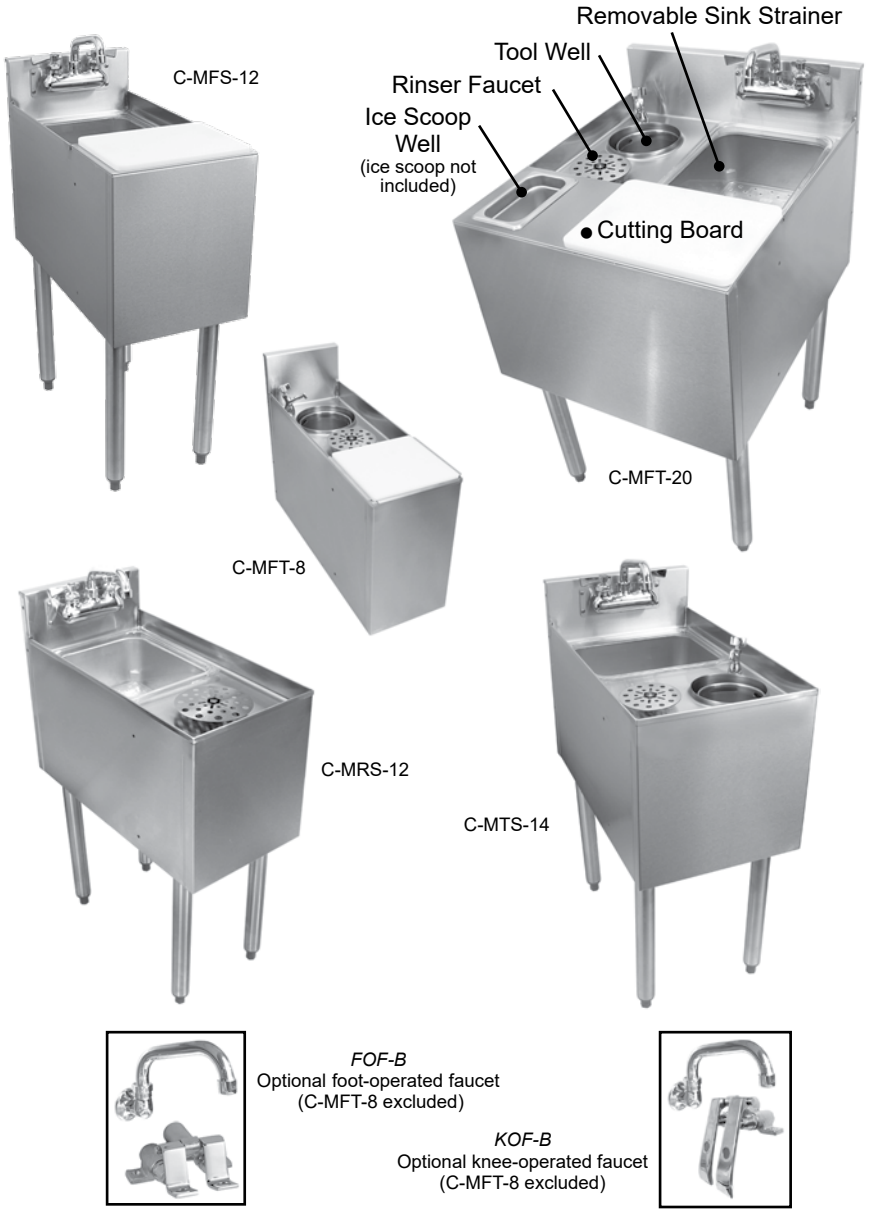

FOF-B
Optional foot-operated faucet
(C-MFT-8 excluded)

KOF-B
Optional knee-operated faucet
(C-MFT-8 excluded)

Configurable Options

Model	Description	List	Wgt
C-LSM	Left side splash, C-MFS-12, C-MFT-8, C-MFT-20	$197	4#
C-RSM	Right side splash, C-MFS-12, C-MFT-8, C-MFT-20	$197	4#
C-LSB-D	Left side splash, C-MRS12, C-MTS-14	$229	5#
C-RSB-D	Right side splash, C-MRS12, C-MTS-14	$229	5#
FOF-B	Foot-operated backsplash faucet (C-MFT-8 excluded)	$725	3#
KOF-B	Knee-operated backsplash faucet (C-MFT-8 excluded)	$742	3#

Rinser faucet installation notes:

- Important: Unit must be installed in conformance with applicable federal, state, and local plumbing codes, including adequate backflow when required.
- Must install backflow prevention device conforming to ANSI/ASSE 1022 or ANSI/ASSE 1024 to meet plumbing code (not included).
- Install in-line water regulator (included).
- A separate shut-off valve is recommended (not included).

⚠**WARNING:** The plastic wet waste strainer included with this product can expose you to chemicals including Bisphenol A (BPA), which is known to the State of California to cause birth defects or other reproductive harm. For more information, go to www.P65Warnings.ca.gov.
Warning applies to State of California only. Part #03000483

Two Compartment Sinks

19″ Deep Model	List	24″ Deep Model	List	Overall Length	Sink Location	Drainboard Length	Weight
C-DSA-24*	$3,467	C-DSB-24*	$3,475	24″	Center	N/A	90#
C-DSA-36L*	$3,640	C-DSB-36L*	$3,704	36″	Left	12″	100#
C-DSA-36R*	$3,640	C-DSB-36R*	$3,704	36″	Right	12″	100#
C-DSA-48*	$3,907	C-DSB-48*	$3,988	48″	Center	2 @ 12″	110#
Three Compartment Sinks							
C-TSA-36*	$3,946	C-TSB-36*	$3,935	36″	Center	N/A	110#
C-TSA-48L*	$4,191	C-TSB-48L*	$4,230	48″	Left	12″	120#
C-TSA-48R*	$4,191	C-TSB-48R*	$4,230	48″	Right	12″	120#
C-TSA-60	$4,425	C-TSB-60	$4,452	60″	Center	2 @ 12″	130#
C-TSA-72*	$4,540	C-TSB-72*	$4,619	72″	Center	2 @ 18″	145#
C-TSA-84*	$4,834	C-TSB-84*	$4,981	84″	Center	2 @ 24″	160#
C-TSA-96*	$4,972	C-TSB-96*	$5,214	96″	Center	2 @ 30″	175#
Four Compartment Sinks							
C-FSA-48*	$4,891	C-FSB-48*	$4,982	48″	Center	N/A	125#
C-FSA-72	$5,240	C-FSB-72	$5,260	72″	Center	2 @ 12″	155#
C-FSA-84*	$5,454	C-FSB-84*	$5,671	84″	Center	2 @ 18″	170#
C-FSA-96*	$5,659	C-FSB-96*	$5,826	96″	Center	2 @ 24″	185#

Multiple Sink Accessories

Model	Description	List	Wgt
C-SR-24	24″ single speed rail	$261	7#
C-SR-36	36″ single speed rail	$308	10#
C-SR-42	42″ single speed rail	$331	12#
C-SR-48	48″ single speed rail	$354	13#
C-SR-60	60″ single speed rail	$463	18#
C-SR-72	72″ single speed rail	$510	23#
C-DR-24	24″ double speed rail	$516	14#
C-DR-36	36″ double speed rail	$600	18#
C-DR-42	42″ double speed rail	$642	21#
C-DR-48	48″ double speed rail	$683	24#
C-DR-60	60″ double speed rail	$874	32#
C-DR-72	72″ double speed rail	$970	40#
NOTE: For 84″ sink order two 42″ speed rails or for 96″ sink order two 48″ speed rails.			
C-LSA-D	Left side splash for 19″d (A) models	$197	4#
C-RSA-D	Right side splash for 19″d (A) models	$197	4#
C-LSB-D	Left side splash for 24″d (B) models	$229	5#
C-RSB-D	Right side splash for 24″d (B) models	$229	5#
TR	Towel ring	$26	1#
LWS	Large wet waste strainer	$97	3#
03002552	Sink cover, perforated, for C-DS models	$188	5#
03002553	Sink cover, perforated, for C-TS models	$282	8#
03002554	Sink cover, perforated, for C-FS models	$380	12#

Product Information

(see C-DS, C-TS, and C-FS Spec Sheets for complete details)

Standard Features

- All stainless steel construction and adjustable stainless steel bullet feet
- One-piece seamless top and backsplash featuring 1/4″ radius corners for easy cleaning
- 20 gauge stainless steel fabricated sink bowls are 70% thicker than the competition's 20 gauge drawn bowls
- 11″ by 14″ by 10-1/4″ deep sink bowl with hot and cold water faucet
- Extra wide sink bowl easily accommodates brush washer
- Perforated stainless steel inserts are available to cover sinks when not in use
- One over-flow tube per sink bowl included



Compartment Sinks come in three different varieties: two, three, and four compartment. They feature a one-piece stainless steel top that is seamless all the way through the backsplash. Each variety is offered with or without built-in drainboards on one or both sides of the sink compartment. The corrugated drainboards, where included, are a seamless and integral part of the work surface. The seamless welded bowls are 20 gauge fabricated stainless steel. An 'L' or 'R' suffix in the model number designates the location of the sink compartment as left or right when there is only one drainboard.

*NOTE: These compartment sinks are manufactured to order and are not returnable

CHOICE BY GLASTENDER

Glastender, Inc. • 5400 North Michigan Road • Saginaw, MI • 48604-9780
800.748.0423 • 989.752.4275 • Fax 989.752.4444 • www.glastender.com



C-LD-18

24″ Deep Liquor Steps

Model	Without Locking Cover List	Without Locking Cover Weight	With Locking Cover List	With Locking Cover Weight	Length
C-LD-12	$1,721	50#	$2,730	50#	12″
C-LD-18	$1,841	55#	$2,940	55#	18″
C-LD-24	$1,972	60#	$3,144	60#	24″



Locking cover configurable option
(shown on C-LD-12)

Product Information

(see C-LD Spec Sheet
for complete details)

Configurable Option

Locking Cover - The removable locking cover is one-piece and foldable for easy storage. The liquor steps are lowered 4″ to accommodate the locking cover.

NOTE: Locking covers must be specified at time of order, cannot be added in the field.



C-PCB-24



C-LSP-3 & C-RSP-3 Accessories
(shown on C-PCB-24)

Product Information

(see C-PCB Spec Sheet for complete details)

Standard Features

• All stainless steel construction • Adjustable stainless steel bullet feet • One-piece seamless top and backsplash • Louvered door for air flow on models with a door • Lock standard on models with a door • Special 26″ high work surface height to accommodate cash drawer and POS monitor • Grommeted cord access hole in work surface • Large access hole in back wall of unit

24″ Deep POS Cabinets			
Model	List	Length	Weight
C-PCB-18	$2,852	18″	71#
C-PCB-24	$3,143	24″	81#
24″ Deep POS Cabinets Less Doors			
C-PCB-18-LD	$1,985	18″	62#
C-PCB-24-LD	$2,190	24″	69#

Configurable Options*			
Model	Description	List	Weight
C-LSP	Left side splash	$197	3#
C-RSP	Right side splash	$197	3#

*NOTE: Verify cash drawer width before ordering side splash options

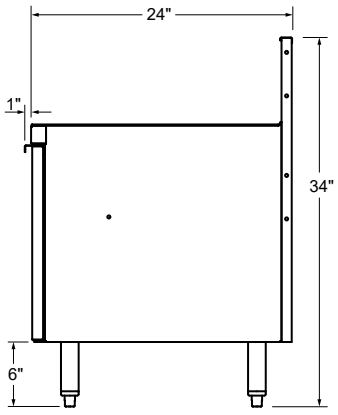

Installation Side Elevation

Choice Island Oasis® Stand*

Pricing effective January 1, 2027

Product Information

(see C-IOS Spec Sheet for complete details)

The Choice Island Oasis® Stand is designed for use with the model number SB-3X Island Oasis® machine. The 18″ wide by 29″ deep stand has a lowered draining work surface and extended front to allow the machine to be stored at a convenient and usable height. In most bar applications, the clear plastic ice container will be visible above the bar top.

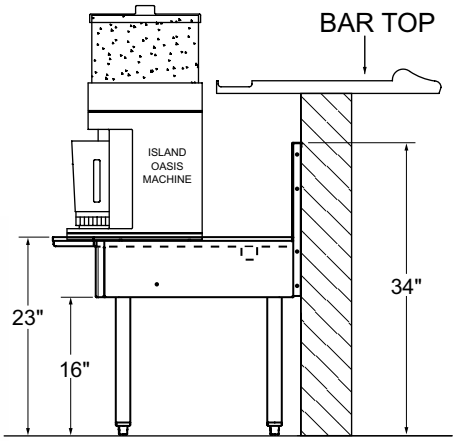

Installation Side Elevation

Standard Features

- All stainless steel construction
- Adjustable stainless steel bullet feet
- 1″ deep drain pan work surface to capture excess moisture
- One-piece seamless top and backsplash featuring 1/4″ radius corners for easy cleaning
- Lowered work surface with extended front
- Designed to keep the majority of the Island Oasis® (model #SB-3X) below the bar top with only the clear plastic ice tub visible above the bar top
- Chamfered front to eliminate “knee knockers”


C-IOS-18

Island Oasis® Stand

Model	List	Length	Weight
C-IOS-18	$1,670	18″	50#

*NOTE: Choice Island Oasis Stands are manufactured to order and are not returnable

Choice Beer Drainers*

Pricing effective January 1, 2027

Product Information

(see C-BD Spec Sheet for complete details)

Beer Drainers have a 26″ high, lowered work surface and are designed specifically for use with undercounter mounting beverage dispensers. The work surface includes a drain pan with perforated insert to serve as the drip pan for the dispenser and the backsplash is pulled forward 5″ to provide access for beverage lines.

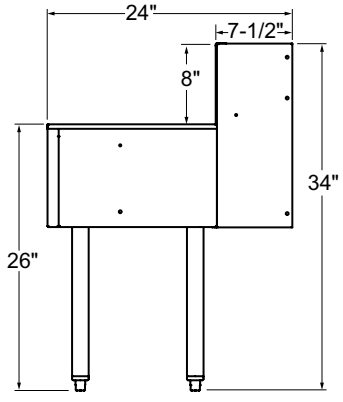

Installation Side Elevation

24″ Deep Beer Drainers

Model	List	Length	Weight
C-BD-18	$1,259	18″	55#
C-BD-24	$1,403	24″	60#
C-BD-30	$1,546	30″	65#
C-BD-36	$1,690	36″	70#

Standard Features

- All stainless steel construction
- Designed with lowered work surface to work in conjunction with undercounter mounting beverage dispensers
- Adjustable stainless steel bullet feet
- Backsplash pulled forward 5″ to create large chaseway for beverage line access
- Front drain pan with lift-out stainless steel perforated insert


C-BD-18

*NOTE: Beer drainers are manufactured to order and are not returnable

CHOICE BY GLASTENDER
Glastender, Inc. • 5400 North Michigan Road • Saginaw, MI • 48604-9780
800.748.0423 • 989.752.4275 • Fax 989.752.4444 • www.glastender.com

Choice Dry Waste Chutes


C-DW-15L

Product Information

(see C-DW Spec Sheet for complete details)

There are four different Dry Waste Chute models to meet various installation requirements.

Standard Features

- Lift-up top for emptying the trash receptacle
- Completely removable top for thorough cleaning
- C-DW-12 mounts between two adjacent pieces of Choice underbar and has no legs
- C-DW-15L and C-DW-15R include a single leg set and mount to an adjacent piece of Choice underbar
- C-DW-14-C† is freestanding
- All models are designed to house a Rubbermaid Slim Jim® trash receptacle

† Patent Pending

24″ Deep Dry Waste Chutes

Model	List	Leg Position	Length	Weight
C-DW-12	$777	N/A	12″	30#
C-DW-14-C†	$2,557	N/A	14"	64#
C-DW-15L	$1,236	Left	15″	45#
C-DW-15R	$1,236	Right	15″	45#

Configurable Options

Model	Description	List	Weight
C-LSDW	Left side splash (C-DW-14-C†)	$197	4#
C-RSDW	Right side splash (C-DW-14-C†)	$197	4#

Accessory

Model	Description	List	Weight
03000497	Rubbermaid Slim Jim®	$311	10#

Choice Clip-On Dry Waste Rails

Product Information

(see C-DWR Spec Sheet for complete details)

There are three different Clip-On Dry Waste Rail models to meet various installation requirements. For all three versions, the dry waste chute portion easily lifts off for thorough cleaning.


C-DWR-S

The C-DWR-S is 5″ deep front-to-back and designed to align with adjacent equipment that has a single speed rail.


C-DWR-D

The C-DWR-D model is 10″ deep front-to-back and designed to align with adjacent equipment that has a double speed rail. The C-DWR-D has a speed rail step in the back with the dry waste chute at the front.

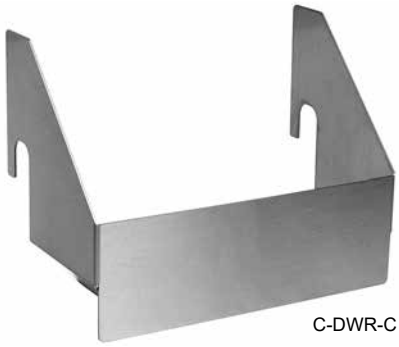
C-DWR-C

The C-DWR-C model is designed to clip to another speed rail and adds 5″ to the front-to-back depth.

Clip-On Dry Waste Rails

Model	List	Length	Depth	Weight
C-DWR-S	$240	12″	5″	5#
C-DWR-D	$491	12″	10″	9#
C-DWR-C	$246	12″	5″	5#

Standard Features

- All stainless steel construction
- Matches speed rail profile for continuity of design
- Bolts to the front skirt of non-cabinet base underbar equipment or clips to the rail of an underbar speed rails
- Stainless steel chute is removable for cleaning

Product Information

(see C-SR and C-DR Spec Sheets for complete details)



C-SR-18



C-DR-24



C-SRC-18



C-SRC-18
Shown installed
on speed rail

Single Speed Rails

Model	List	Length	Weight
C-SR-12	$215	12″	5#
C-SR-13 to 18	$238	13″ to 18″	6#
C-SR-19 to 24	$261	19″ to 24″	7#
C-SR-25 to 30	$284	25″ to 30″	9#
C-SR-31 to 36	$308	31″ to 36″	10#
C-SR-37 to 42	$331	37″ to 42″	12#
C-SR-43 to 48	$354	43″ to 48″	13#
C-SR-49 to 54	$440	49″ to 54″	16#
C-SR-55 to 60	$463	55″ to 60″	18#
C-SR-61 to 66	$486	61″ to 66″	21#
C-SR-67 to 72	$510	67″ to 72″	23#

Double Speed Rails

Model	List	Length	Weight
C-DR-12	$433	12″	9#
C-DR-13 to 18	$474	13″ to 18″	11#
C-DR-19 to 24	$516	19″ to 24″	14#
C-DR-25 to 30	$557	25″ to 30″	16#
C-DR-31 to 36	$600	31″ to 36″	18#
C-DR-37 to 42	$642	37″ to 42″	21#
C-DR-43 to 48	$683	43″ to 48″	24#
C-DR-49 to 54	$826	49″ to 54″	28#
C-DR-55 to 60	$874	55″ to 60″	32#
C-DR-61 to 66	$921	61″ to 66″	36#
C-DR-67 to 72	$970	67″ to 72″	40#

Locking Speed Rail Covers

Model	List	Length	Weight
C-SRC-12	$366	12″	7#
C-SRC-13 to 18	$396	13″ to 18″	9#
C-SRC-19 to 24	$424	19″ to 24″	11#
C-SRC-25 to 30	$456	25″ to 30″	13#
C-SRC-31 to 36	$489	31″ to 36″	16#
C-SRC-37 to 42	$518	37″ to 42″	18#
C-SRC-43 to 48	$549	43″ to 48″	21#

CHOICE BY GLASTENDER

Glastender, Inc. • 5400 North Michigan Road • Saginaw, MI • 48604-9780
800.748.0423 • 989.752.4275 • Fax 989.752.4444 • www.glastender.com

Model number C-MD-41 Choice modular bar die has an overall height of 41″, which provides the appropriate overall height for most bar applications. However, some interior designs require an extra thick bar top, so Choice modular bar die is also available with an overall height of 38″. See model C-MD-38.

With the Choice Modular Bar Die, underbar equipment is mounted to and supported on the bar die. All the underbar equipment is pre-assembled and mounted to the bar die at the factory, then broken down into shippable sections. Installation of the bar die is very simple - easier than a conventional style underbar with a millwork bar die. The result is a beautiful, innovative underbar line up that is sealed to the floor, stainless from floor to bar top, eliminates all underbar leg sets, and hides the soda, beer, electrical, and plumbing lines.

Product Information

(see C-MD Spec Sheet for complete details)

Features

- 16 gauge galvanized steel structure with stainless steel bartender side finishing
- 20A GFI outlets built into bar die wall based on customer preference (wiring not provided)
- LED lights built into bar die wall above underbar equipment (wiring not provided)
- Built in chaseways for beer, soda, plumbing, and electrical lines

Benefits

- Stainless steel from floor to bar top on bartender side
- Floor can be sealed to the bar die to prevent moisture from seeping from the bartender side to the customer side of the bar
- Galvanized steel structure will not rot
- Built-in chaseways hide beer, soda, plumbing, and electrical lines for a cleaner, more attractive bar
- Arrives pre-assembled from factory in sections up to 6 feet for easy installation - lowers installation costs. Just bolt the sections together, level, and attach the floor.
- Pre-engineered to exact dimensions to ensure a precise fit
- Can be used in conjunction with removable front millwork finishing panels to provide easy access to soda, beer, plumbing, and electrical lines for future modification, maintenance, or repair
- Millwork bar top and front panels can be pre-fabricated and easily attached
- Eliminates all underbar legs for easy cleaning



The total Number of feet required is calculated by determining the overall outside dimension of the bar die wall. Please round up to the nearest whole foot.

SIDE ELEVATIONS

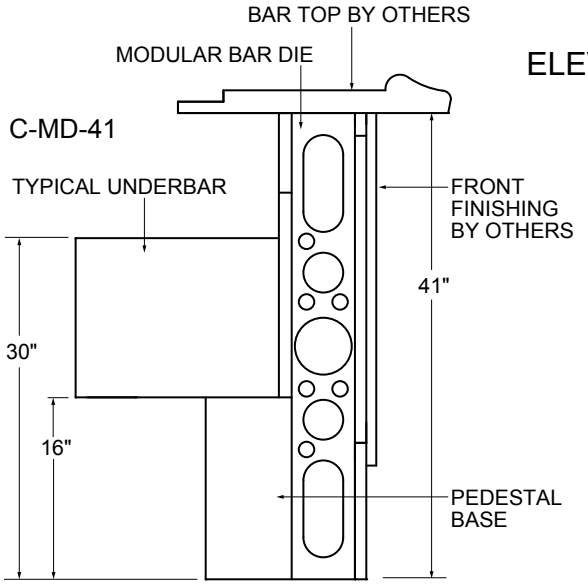

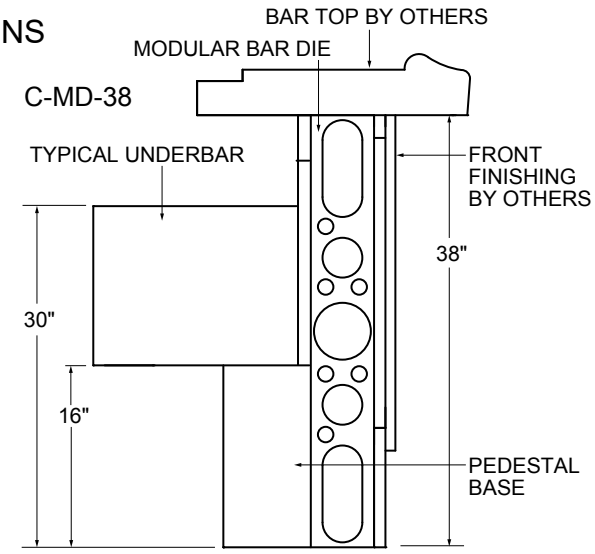

41″ High Modular Bar Die

Model	Description	List	Weight
C-MD-41	Price per foot	$531	15#
MDT	48" wide vinyl template - price per foot	$38	

38″ High Modular Bar Die

Model	Description	List	Weight
C-MD-38	Price per foot	$531	15#
MDT	48" wide vinyl template - price per foot	$38	



C1FB60 with compressor left, stainless doors and top

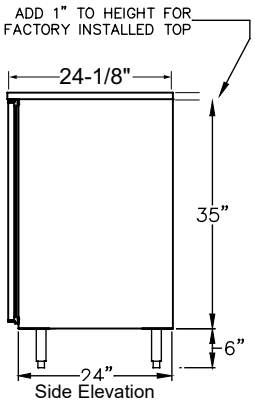

Side Elevation

Draft Beverage Compatible

Product Information

(see C1FB Spec Sheet for complete details)

Standard Features:

- Self-contained
- All stainless steel interior construction
- Draft beverage compatible - see page 92
- Listed to NSF Standard 7 for open food as a storage refrigerator

Coolers - One Zone, Front Serviced, Bar Profile

Model	List	Length	Doors	Door Opening	Weight	Amps	HP	Long Neck 750ml Wine Cases	Long Neck 750ml Wine Bottles**	1/2 Barrel Kegs	1/6 Barrel Kegs
C1FB32	$7,457	32″	1	16″ W	235#	3.5	1/6	5.8	65	N/A	2
C1FB36	$7,527	36″	1	20″ W	250#	3.5	1/6	7.8	87	1	4
C1FB52	$9,857	52″	2	16″ W	330#	3.5	1/6	13.3	151	N/A	7
C1FB60	$10,120	60″	2	20″ W	360#	3.5	1/6	17.3	180	2	8
C1FB72	$11,712	72″	3	16″ W	410#	7.0	1/4	21.1	240	N/A	11
C1FB84	$12,181	84″	3	20″ W	490#	7.0	1/4	27.1	282	4	14 †
C1FB92	$14,110	92″	4	16″ W	545#	7.0	1/4	28.8	329	N/A	15
C1FB108	$14,557	108″	4	20″ W	590#	7.0	1/4	36.8	384	5	18

Base price only. See next page for configurable options.

**Wine bottle capacity is based on adjustable shelves. Drawers will hold less. NOTE: Coolers with drawers are not returnable.

† If CO_2 tank is stored internally, reduce capacity by one keg

The CO-RR shelf retention rail should be used on all shelves adjacent to drawers and/or kegs. (CO-RR shown installed on shelf)

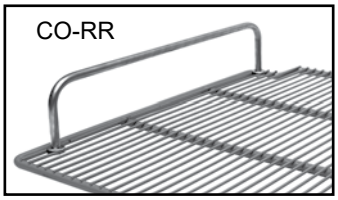



CWS-20
Wine rack shelf for 20″ door opening

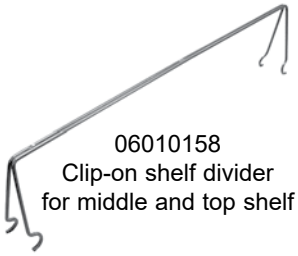

06010158
Clip-on shelf divider for middle and top shelf

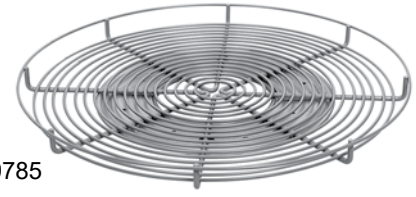

06009785

In a typical cooler, only the front row of bottles is easy to access. Glastender's rotary wine shelf increases access by 270% (16 vs. 6 bottles).

The rotary wine shelf is for use with C1FB36, C1FB60, C1FB84, and C1FB108 model coolers. Two rotary shelves can be used behind each 20″ cooler door opening, where they sit on two standard cooler shelves. Each rotary shelf holds up to 29 wine bottles (750ml).

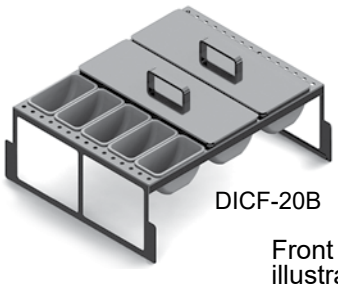

DICF-20B

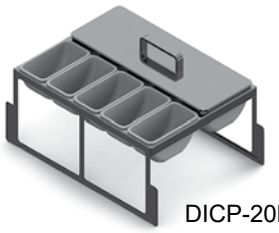

DICP-20B

Front covers removed for illustrative purposes

Accessories

Model	Description	List
06009785	Rotary wine shelf (20″ door opening ONLY)	$316
CO-RR	Shelf retention rail	$81
CWS-16	Wine rack shelf for 16″ door opening, 5 bottle	$190
CWS-20	Wine rack shelf for 20″ door opening, 7 bottle	$215
DICF-16B	Drawer insert, garnishes, full, 16″ door opening, bar-profile cooler, 12 cups	$654
DICP-16B	Drawer insert, garnishes, partial, 16″ door opening, bar-profile cooler, 8 cups	$494
DICF-20B	Drawer insert, garnishes, full, 20″ door opening, bar-profile cooler 15 cups	$771
DICP-20B	Drawer insert, garnishes, partial, 20″ door opening, bar-profile cooler, 10 cups	$570
DIP-20	Drawer insert for food pans	$301
06010158	Clip-on shelf divider for middle and top shelf	$50
06006013	Clip-on shelf divider for bottom shelf only	$50

Glastender

Glastender, Inc. • 5400 North Michigan Road • Saginaw, MI • 48604-9780
800.748.0423 • 989.752.4275 • Fax 989.752.4444 • www.glastender.com

Draft Beverage Compatible

Select Configurable Options:

Voltage

120V/60HZ	No charge
220V/50HZ (export voltage)	$322

Temperature

Beer / Food, 34° to 40°, standard	No charge
White wine, 50° to 55°	No charge
Red wine, 60° to 65°	No charge

Refrigeration Compartment Location

Left	No charge
Right	No charge

Refrigeration Compartment Cover Finish

Black vinyl-clad	No charge
Unlaminated	No charge
Stainless steel	No charge
Jeweled stainless steel	$244
Laminated	$284

Door/Drawer Options

NOTE: Select options for EACH Door/Drawer Section

Style and Finish - Per Section

Door - Black vinyl-clad	No charge
Door - Unlaminated	No charge
Door - Stainless steel	No charge
Door - Jeweled stainless	$265
Door - Laminated	$302
Door - Glass, black vinyl-clad	$587
Door - Glass, stainless steel	$587
Door - Glass, jeweled stainless	$852
Door - Glass, laminated	$889
Drawers* - Black vinyl-clad	$2,430
Drawers* - Unlaminated	$2,430
Drawers* - Stainless steel	$2,430
Drawers* - Jeweled stainless	$2,695
Drawers* - Laminated	$2,732

*NOTE: Units with drawers are manufactured to order and are not returnable.

Door Hinge Location - Per Door

Left	No charge
Right	No charge

Shelving - Per Door

Three adjustable shelves	No charge
Keg rack	No charge
Pull-out wine shelves:	
• w/upright & horizontal storage	$2,687
• w/upright storage	$1,793
• w/horizontal storage*	$3,359

*NOTE: Not available for door next to compressor compartment

Door Handle - Per Door/Drawer

Signature handle (doors only)	No charge
Pull-tab handle - stainless or black to match door/drawer; black for laminate	No charge
Tube handle	No charge

NOTE: All coolers with drawers are manufactured to order and are not returnable.

Top Style

	32″	36″	52″	60″	72″	84″	92″	108″
No finished top	No charge							
Stainless top	$518	$545	$660	$717	$802	$888	$945	$1,062

Left Side Finish

Black vinyl-clad	No charge
Stainless Steel	No charge

Right Side Finish

Black vinyl-clad	No charge
Stainless Steel	No charge

Back Finish

	32″	36″	52″	60″	72″	84″	92″	108″
Galvanized steel	No charge							
Stainless steel*	$267	$289	$377	$421	$487	$553	$597	$685

*NOTE: Stainless steel back option also includes stainless steel sides.

LED Lighting Style

Bright white (7,000k), standard	No charge
Warm white (3,500k)	No charge
Amber (2,700k)	No charge
Blue	No charge

Leg and Stainless Steel Kick Rails

NOTE: Legs are required if kick rails are ordered.

	32″	36″	52″	60″	72″	84″	92″	108″
6″ legs	$265	$265	$212	$212	$318	$318	$318	$318
Front kick rail	$144	$149	$170	$182	$200	$214	$226	$245
Left side kick rail	$133	$133	$133	$133	$133	$133	$133	$133
Right side kick rail	$133	$133	$133	$133	$133	$133	$133	$133

Casters

	32″	36″	52″	60″	72″	84″	92″	108″
4-1/8″ casters	$234	$234	$191	$191	$289	$289	$289	$289
2-7/8″ casters	$231	$231	$185	$185	$277	$277	$277	$277
1-1/2″ casters	$406	$406	$326	$326	$487	$487	$487	$487



Drawer pull-tab handle

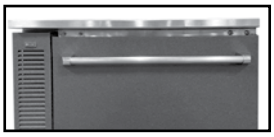

Drawer tube handle



Signature handle



Pull-tab handle



Tube handle

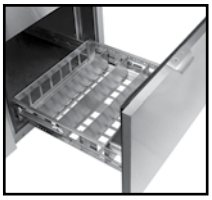

Optional drawers include adjustable divider walls





Optional pull-out wine shelves Horizontal (left) and upright (right) storage shown



C2FB60 with compressor left, stainless doors, and stainless top

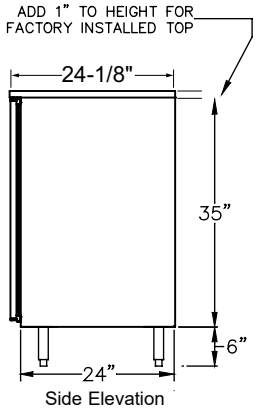

Side Elevation

Draft Beverage Compatible

Product Information

(see C2FB Spec Sheet for complete details)

Standard Features:

- Self-contained
- Available in three different configurations: beer/white wine, beer/red wine, or white/red wine
- The warmer compartment is always a single door located opposite the compressor end
- All stainless steel interior construction
- Draft beverage compatible - see page 92
- Listed to NSF Standard 7 for closed container products

*NOTE: C2FB coolers are manufactured to order and are not returnable.

Coolers - Two Zone, Front Serviced, Bar Profile

Model	List	Length	Doors	Door Opening	Weight	Amps	HP	Long Neck 750ml Wine Cases	Long Neck 750ml Wine Bottles**	1/2 Barrel Kegs	1/6 Barrel Kegs
C2FB52*	$11,530	52″	2	16″ W	365#	3.5	1/6	13.3	127	N/A	4
C2FB60*	$11,789	60″	2	20″ W	375#	3.5	1/6	17.3	160	2	8 †
C2FB72*	$13,388	72″	3	16″ W	475#	7.0	1/4	21.1	216	N/A	9
C2FB84*	$13,740	84″	3	20″ W	490#	7.0	1/4	27.1	258	3	12
C2FB92*	$15,780	92″	4	16″ W	585#	7.0	1/4	28.8	305	N/A	13
C2FB108*	$16,230	108″	4	20″ W	605#	7.0	1/4	36.8	360	5	18 †

Base price only. See next page for configurable options.

**Wine bottle capacity is based on adjustable shelves. Drawers will hold less.

† If CO_2 tank is stored internally, reduce capacity by one keg



CWS-20
Wine rack shelf for 20″ door opening

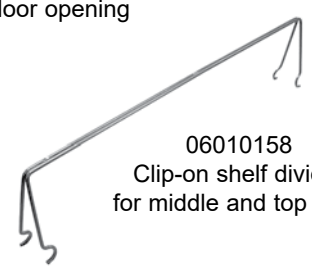

06010158
Clip-on shelf divider for middle and top shelf

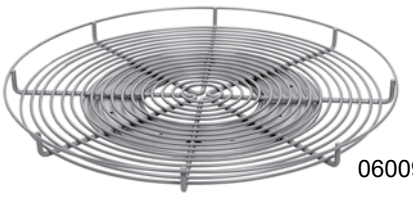

06009785

In a typical cooler, only the front row of bottles is easy to access. Glastender's rotary wine shelf increases access by 270% (16 vs. 6 bottles).

The rotary wine shelf is for use with C2FB60, C2FB84, and C2FB108 model coolers. Two rotary shelves can be used behind each 20″ cooler door opening, where they sit on two standard cooler shelves. Each rotary shelf holds up to 29 wine bottles (750ml).

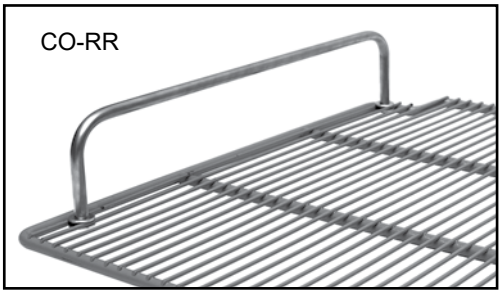

The CO-RR shelf retention rail should be used on all shelves adjacent to drawers and/or kegs. (CO-RR shown installed on shelf)

Accessories

Model	Description	List
06009785	Rotary wine shelf (20″ door opening ONLY)	$316
CO-RR	Shelf retention rail	$81
CWS-16	Wine rack shelf for 16″ door opening, 5 bottle	$190
CWS-20	Wine rack shelf for 20″ door opening, 7 bottle	$215
06010158	Clip-on shelf divider for middle and top shelf	$50
06006013	Clip-on shelf divider for bottom shelf only	$50

Glastender
Glastender, Inc. • 5400 North Michigan Road • Saginaw, MI • 48604-9780
800.748.0423 • 989.752.4275 • Fax 989.752.4444 • www.glastender.com

Draft Beverage Compatible

*NOTE: C2FB coolers are manufactured to order and are not returnable.

Select Configurable Options:

Voltage

120V/60HZ	No charge
220V/50HZ (export voltage)	$322

Temperature

Beer/White wine - 34° to 40°/ 50° to 55°	No charge
Beer/Red wine - 34° to 40°/ 60° to 65°	No charge
White/Red wine - 50° to 55°/ 60° to 65°	No charge

Refrigeration Compartment Location

Left	No charge
Right	No charge

Refrigeration Compartment Cover Finish

Black vinyl-clad	No charge
Unlaminated	No charge
Stainless steel	No charge
Jeweled stainless steel	$244
Laminated	$284

Door/Drawer Options

NOTE: Select options for EACH Door/Drawer Section

Style and Finish - Per Section

Door - Black vinyl-clad	No charge
Door - Unlaminated	No charge
Door - Stainless steel	No charge
Door - Jeweled stainless	$265
Door - Laminated	$302
Door - Glass, black vinyl-clad	$587
Door - Glass, stainless steel	$587
Door - Glass, jeweled stainless	$852
Door - Glass, laminated	$889
Drawers - Black vinyl-clad	$2,430
Drawers - Unlaminated	$2,430
Drawers - Stainless steel	$2,430
Drawers - Jeweled stainless	$2,695
Drawers - Laminated	$2,732

Door Hinge Location - Per Door

Left	No charge
Right	No charge

Shelving - Per Door

Three adjustable shelves	No charge
Keg rack	No charge
Pull-out wine shelves:	
• w/upright & horizontal storage	$2,687
• w/upright storage	$1,793
• w/horizontal storage*	$3,359

*NOTE: Not available for door next to compressor compartment

Door Handle - Per Door

Signature handle (doors only)	No charge
Pull-tab handle - stainless or black to match door/drawer; black for laminate	No charge
Tube handle	No charge



Optional pull-out wine shelves Horizontal (left) and upright (right) storage shown



Top Style

	52″	60″	72″	84″	92″	108″
No finished top	No charge					
Stainless top	$660	$717	$802	$888	$945	$1,062

Left Side Finish

Black vinyl-clad	No charge
Stainless Steel	No charge

Right Side Finish

Black vinyl-clad	No charge
Stainless Steel	No charge

Back Finish

	52″	60″	72″	84″	92″	108″
Galvanized steel	No charge					
Stainless steel*	$377	$421	$487	$553	$597	$685

*NOTE: Stainless steel back option also includes stainless steel sides.

LED Lighting Style

Bright white (7,000k), standard	No charge
Warm white (3,500k)	No charge
Amber (2,700k)	No charge
Blue	No charge

Leg and Stainless Steel Kick Rails

NOTE: Legs are required if kick rails are ordered.

	52″	60″	72″	84″	92″	108″
6″ legs	$212	$212	$318	$318	$318	$318
Front kick rail	$170	$182	$200	$214	$226	$245
Left side kick rail	$133	$133	$133	$133	$133	$133
Right side kick rail	$133	$133	$133	$133	$133	$133

Casters

	52″	60″	72″	84″	92″	108″
4-1/8″ casters	$191	$191	$289	$289	$289	$289
2-7/8″ casters	$185	$185	$277	$277	$277	$277
1-1/2" casters	$326	$326	$487	$487	$487	$487



Drawer pull-tab handle

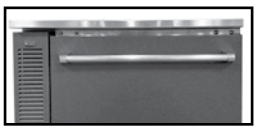

Drawer tube handle



Optional drawers include adjustable divider walls



Signature handle



Pull-tab handle



Tube handle

NOTE: All coolers with drawers are manufactured to order and are not returnable.



C1RB48 with refrigeration hook up right, stainless doors, and stainless top

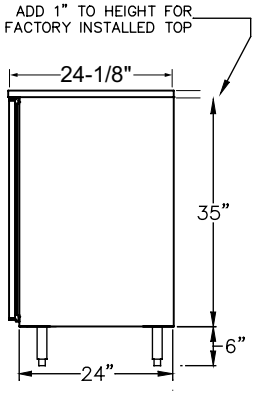

Side Elevation



Product Information

(see C1RB Spec Sheet for complete details)

Standard Features:

- Remote unit
- All stainless steel interior construction
- Draft beverage compatible - see page 92
- Listed to NSF Standard 7 for open food as a storage refrigerator

Coolers - One Zone, Remote, Bar Profile

Model	List	Length	Doors	Door Opening	Weight	BTU /Hr	Long Neck 750ml Wine Cases	Long Neck 750ml Wine Bottles	1/2 Barrel Kegs	1/6 Barrel Kegs
C1RB24	$5,288	24″ W	1	20″	175#	800	8.0	60	1	3
C1RB40*	$7,012	40″ W	2	16″	275#	1,100	12.3	126	N/A	6
C1RB48	$7,346	48″ W	2	20″	285#	1,200	16.2	152	2	7
C1RB60*	$9,310	60″ W	3	16″	390#	1,400	19.9	216	N/A	10
C1RB72	$9,664	72″ W	3	20″	405#	1,500	25.9	256	4	11
C1RB80*	$11,836	80″ W	4	16″	500#	1,700	27.7	294	N/A	14
C1RB96	$12,213	96″ W	4	20″	520#	1,900	35.7	354	5	17

Base price only. See next page for configurable options.

*C1RB40, C1RB60, AND C1RB80 are manufactured to order and are not returnable.

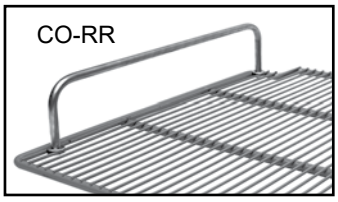

The CO-RR shelf retention rail should be used on all shelves adjacent to kegs. (CO-RR shown installed on shelf)



CWS-20 Wine rack shelf for 20″ door opening

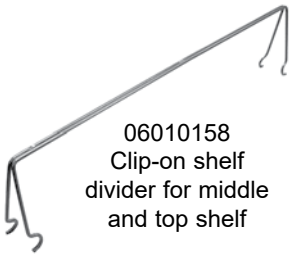

06010158 Clip-on shelf divider for middle and top shelf

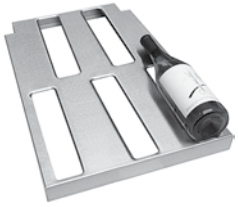

CWS-16 Wine rack shelf for 16″ door opening

Accessories

Model	Description	List
CO-RR	Shelf retention rail	$81
CWS-16	Wine rack shelf for 16″ door opening, 5 bottle	$190
CWS-20	Wine rack shelf for 20″ door opening, 7 bottle	$215
06010158	Clip-on shelf divider for middle and top shelf	$50
06006013	Clip-on shelf divider for bottom shelf only	$50

Accessory For Remote Cooler Cabinet

Model	Description	List	Wt
SVC	Solenoid valve and coil kit, for remote unit	$332	6#
SVC-L	Solenoid valve and coil kit with factory installation, for remote unit	$701	6#

Glastender

Glastender, Inc. • 5400 North Michigan Road • Saginaw, MI • 48604-9780
800.748.0423 • 989.752.4275 • Fax 989.752.4444 • www.glastender.com

Draft Beverage Compatible

*NOTE: C1RB40, C1RB60, and C1RB80 coolers are manufactured to order and are not returnable.

Select Configurable Options:

Voltage

120V/60HZ	No charge
220V/50HZ (export voltage)	$164

Temperature

Beer / Food, 34° to 40°, standard	No charge
White wine, 50° to 55°	No charge
Red wine, 60° to 65°	No charge

Expansion Valve Type

R448A or R449A	No charge
R134a or R513A	No charge
R404A or R452A	No charge
R407A or R407F	No charge

Refrigeration Hook-Up Location

Left	No charge
Right	No charge

Door Options

NOTE: Select options for EACH Door Section

Style and Finish - Per Door

Door - Black vinyl-clad	No charge
Door - Unlaminated	No charge
Door - Stainless steel	No charge
Door - Jeweled stainless	$265
Door - Laminated	$302
Door - Glass, black vinyl-clad	$587
Door - Glass, stainless steel	$587
Door - Glass, jeweled stainless	$852
Door - Glass, laminated	$889

Door Hinge Location - Per Door

Left	No charge
Right	No charge

Shelving - Per Door

Three adjustable shelves	No charge
Keg rack	No charge
Pull-out wine shelves w/upright & horizontal storage	$2,548

Door Handle - Per Door

Signature handle	No charge
Pull-tab handle - stainless or black to match door; black for laminate	No charge
Tube handle	No charge

Top Style

	24″	40″	48″	60″	72″	80″	96″
No finished top	No charge						
Stainless top	$462	$573	$631	$717	$802	$860	$974

Left Side Finish

Black vinyl-clad	No charge
Stainless Steel	No charge

Right Side Finish

Black vinyl-clad	No charge
Stainless Steel	No charge

Back Finish

	24″	40″	48″	60″	72″	80″	96″
Galvanized steel	No charge						
Stainless steel*	$223	$311	$355	$421	$487	$531	$619

*NOTE: Stainless steel back option also includes stainless steel sides.

LED Lighting Style

Bright white (7,000k), standard	No charge
Warm white (3,500k)	No charge
Amber (2,700k)	No charge
Blue	No charge

Leg and Stainless Steel Kick Rails

NOTE: Legs are required if kick rails are ordered.

	24″	40″	48″	60″	72″	80″	96″
6″ legs	$212	$212	$212	$318	$318	$318	$318
Front kick rail	$133	$152	$166	$182	$200	$209	$231
Left side kick rail	$133	$133	$133	$133	$133	$133	$133
Right side kick rail	$133	$133	$133	$133	$133	$133	$133



Signature handle



Pull-tab handle





Optional pull-out wine shelves
Horizontal (left) and upright (right) storage shown



Tube handle

Bar Refrigeration



C1SB24 with compressor left, stainless door and top

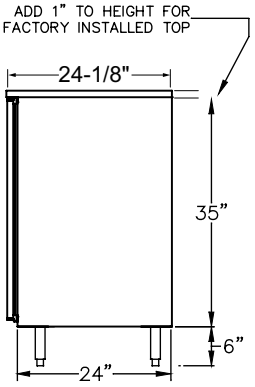

Side Elevation

Draft Beverage Compatible

Product Information

(see C1SB Spec Sheet for complete details)

Standard Features:

- Self-contained
- All stainless steel interior construction
- Draft beverage compatible - see page 92
- Listed to NSF Standard 7 for open food as a storage refrigerator

Coolers - One Zone, Side Serviced, Bar Profile

Model	List	Length	Doors	Door Opening	Weight	Amps	HP	Long Neck Cases	750ml Wine Bottles**	1/2 Barrel Kegs	1/6 Barrel Kegs
C1SB20*	$6,879	20"	1	12″ W	185#	2.75	1/8	3.3	52	0	2†⩚
C1SB24	$6,675	24″	1	17.5″ W	200#	2.75	1/8	5.8	74	1	3⩚
C1SB28*	$7,010	28″	1	20″ W	220#	2.75	1/8	6.6	87	1	4†▲
C1SB36*	$9,327	36″	2	12″ W	255#	2.75	1/8	8.9	111	N/A	5▲
C1SB44*	$9,732	44″	2	16″ W	280#	2.75	1/8	12.0	150	N/A	7▲
C1SB48	$9,936	48″	2	18″ W	300#	2.75	1/8	13.2	177	2	8†▲

Base price only. See next page for configurable options.

*NOTE: C1SB20, C1SB28, C1SB36, and C1SB44 coolers are manufactured to order and are not returnable.

** Wine bottle capacity is based on adjustable shelves. Drawers will hold fewer. NOTE: Coolers with drawers are not returnable.

† If CO_2 tank is stored internally, reduce capacity by one keg

⩚ Requires one 05001026 low profile Sanke keg tap - see page 92

▲ Requires two 05001026 low profile Sanke keg taps - see page 92

CO-RR

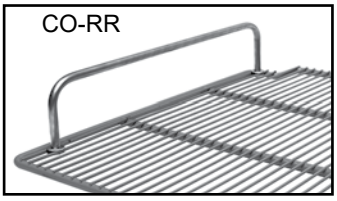

The CO-RR shelf retention rail should be used on all shelves adjacent to kegs. (CO-RR shown installed on shelf)



CWS-20 Wine rack shelf for 20″ door opening

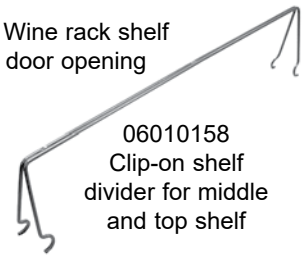

06010158 Clip-on shelf divider for middle and top shelf

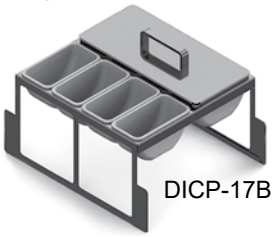

DICP-17B

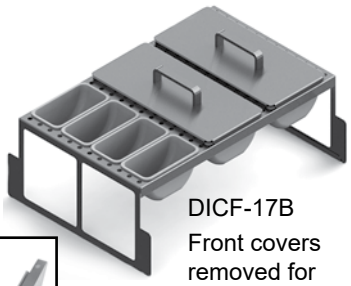

DICF-17B

Front covers removed for illustrative purposes

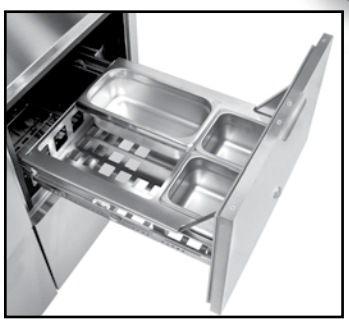

DIP-18 Pans not included

Accessories

Model	Description	List
CO-RR	Shelf retention rail	$81
CWS-12	Wine rack shelf for 12″ door opening, 3 bottle	$164
CWS-16	Wine rack shelf for 16″ door opening, 5 bottle	$190
CWS-17	Wine rack shelf for 17.5″ door opening, 5 bottle	$204
CWS-18	Wine rack shelf for 18″ door opening, 5 bottle	$206
CWS-20	Wine rack shelf for 20″ door opening, 7 bottle	$215
DICF-12B	Drawer insert, garnishes, full, 12″ door opening, bar-profile cooler, 8 cups	$509
DICP-12B	Drawer insert, garnishes, partial, 12″ door opening, bar-profile cooler, 6 cups	$411
DICF-16B	Drawer insert, garnishes, full, 16″ door opening, bar-profile cooler, 12 cups	$654
DICP-16B	Drawer insert, garnishes, partial, 16″ door opening, bar-profile cooler, 8 cups	$494
DICF-17B	Drawer insert, garnishes, full, 17.5″ door opening, bar-profile cooler, 12 cups	$657
DICP-17B	Drawer insert, garnishes, partial, 17.5″ door opening, bar-profile cooler, 8 cups	$497
DICF-18B	Drawer insert, garnishes, full, 18″ door opening, bar-profile cooler, 12 cups	$662
DICP-18B	Drawer insert, garnishes, partial, 18″ door opening, bar-profile cooler, 8 cups	$499
DICF-20B	Drawer insert, garnishes, full, 20″ door opening, bar-profile cooler, 15 cups	$771
DICP-20B	Drawer insert, garnishes, partial, 20″ door opening, bar-profile cooler, 10 cups	$570
DIP-17	Drawer insert for fractional stainless pans, 17.5" door opening (pans not included)	$271
DIP-18	Drawer insert for fractional stainless pans, 18" door opening (pans not included)	$277
DIP-20	Drawer insert for fractional stainless pans, 20" door opening (pans not included)	$301
06010158	Clip-on shelf divider for middle and top shelf	$50
06006013	Clip-on shelf divider for bottom shelf only	$50

Glastender

Glastender, Inc. • 5400 North Michigan Road • Saginaw, MI • 48604-9780
800.748.0423 • 989.752.4275 • Fax 989.752.4444 • www.glastender.com

Draft Beverage Compatible

Select Configurable Options:

Voltage

120V/60HZ	No charge
220V/50HZ (export voltage)	$322

Temperature

Beer / Food, 34° to 40°, standard	No charge
White wine, 50° to 55°	No charge
Red wine, 60° to 65°	No charge

Refrigeration Compartment Location

Left	No charge
Right	No charge

Refrigeration Compartment Cover Finish

Black vinyl-clad	No charge
Stainless steel	No charge
Jeweled stainless steel	$244

Door/Drawer Options

NOTE: Select options for EACH Door/Drawer Section

Style and Finish - Per Section

Door - Black vinyl-clad	No charge
Door - Unlaminated	No charge
Door - Stainless steel	No charge
Door - Jeweled stainless	$265
Door - Laminated	$302
Door - Glass, black vinyl-clad	$587
Door - Glass, stainless steel	$587
Door - Glass, jeweled stainless	$852
Door - Glass, laminated	$889
Drawers* - Black vinyl-clad	$2,430
Drawers* - Unlaminated	$2,430
Drawers* - Stainless steel	$2,430
Drawers* - Jeweled stainless	$2,695
Drawers* - Laminated	$2,732

*NOTE: Units with drawers are manufactured to order and are not returnable.

Door Hinge Location - Per Door

Left	No charge
Right	No charge

Shelving - Per Door

Three adjustable shelves	No charge
Keg rack	No charge
Pull-out wine shelves:	
• w/upright & horizontal storage*	$2,687
• w/upright storage*	$1,793
• w/horizontal storage*	$3,359

*NOTE: Not available for 12" door opening models

Door Handle - Per Door/Drawer

Signature handle (doors only)	No charge
Pull-tab handle - stainless or black to match door; black for laminate	No charge
Tube handle	No charge

NOTE: All coolers with drawers are manufactured to order and are not returnable.

*NOTE: C1SB20, C1SB28, C1SB36, and C1SB44 coolers are manufactured to order and are not returnable.

Top Style

	20″	24″	28″	36″	44″	48″
No finished top	No charge					
Stainless top	$433	$462	$488	$545	$604	$631

Left Side Finish

Black vinyl-clad	No charge
Stainless Steel	No charge

Right Side Finish

Black vinyl-clad	No charge
Stainless Steel	No charge

Back Finish

	20″	24″	28″	36″	44″	48″
Galvanized steel	No charge					
Stainless steel*	$201	$223	$245	$289	$333	$355

*NOTE: Stainless steel back option also includes stainless steel sides.

LED Lighting Style

Bright white (7,000k), standard	No charge
Warm white (3,500k)	No charge
Amber (2,700k)	No charge
Blue	No charge

Leg and Stainless Steel Kick Rails

NOTE: Legs are required if kick rails are ordered.

	20″	24″	28″	36″	44″	48″
6″ legs	$212	$212	$212	$212	$212	$212
Front kick rail	$129	$133	$140	$149	$161	$166
Left side kick rail	$133	$133	$133	$133	$133	$133
Right side kick rail	$133	$133	$133	$133	$133	$133

Casters

	20″	24″	28″	36″	44″	48″
4-1/8″ casters	$191	$191	$191	$191	$191	$191
2-7/8″ casters	$185	$185	$185	$185	$185	$185
1-1/2″ casters	$326	$326	$326	$326	$326	$326



Drawer pull-tab handle

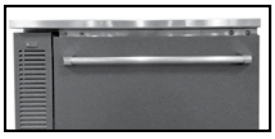

Drawer tube handle



Signature handle



Pull-tab handle



Tube handle

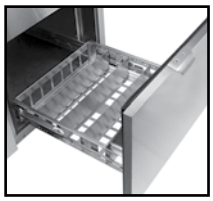

Optional drawers include adjustable divider walls



Optional pull-out wine shelves Horizontal (left) and upright (right) storage shown

Bar Refrigeration



C2SB48 with compressor left, stainless doors, and stainless top



Product Information

(see C2SB Spec Sheet for complete details)

Standard Features:

- Self-contained
- All stainless steel interior construction
- Available in three different configurations: beer/white wine, beer/red wine, or white/red wine
- The warmer compartment is always a single door located opposite the compressor end
- Draft beverage compatible - see page 92
- Listed to NSF Standard 7 for closed container products

*NOTE: C2SB coolers are manufactured to order and are not returnable.

Coolers - Two Zone, Side Serviced, Bar Profile

Model	List	Length	Doors	Door Opening	Weight	Amps	HP	LongNeck Cases	750mlWine Bottles**	1/2Barrel Kegs	1/6Barrel Kegs
C2SB36	$10,818	36″	2	12″ W	317#	2.75	1/8	6.5	63	N/A	4† ⩚
C2SB44	$11,237	44″	2	16″ W	347#	2.75	1/8	9.7	109	N/A	4 ⩚
C2SB48	$11,449	48″	2	18″ W	360#	2.75	1/8	12.5	109	2	6 ⩚

Base price only. See next page for configurable options.

**Wine bottle capacity is based on adjustable shelves. Drawers will hold fewer.

† If CO_2 tank is stored internally, reduce capacity by one keg

⩚ Requires one 05001026 low profile Sanke keg tap - see page 92

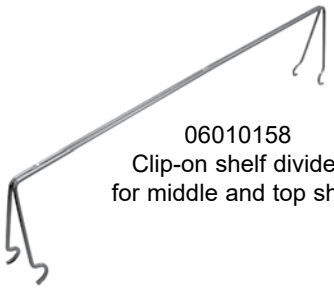

06010158
Clip-on shelf divider
for middle and top shelf



Optional drawers include adjustable divider walls

*NOTE: All coolers with drawers are manufactured to order and are not returnable.



CWS-16
Wine rack shelf for
16″ door opening

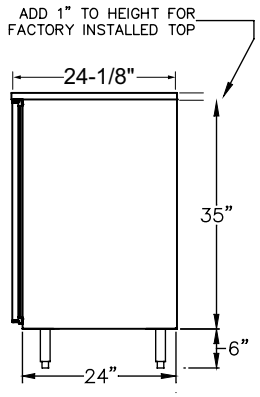

Side Elevation

Accessories

Model	Description	List
CWS-12	Wine rack shelf for 12″ door opening, 3 bottle	$164
CWS-16	Wine rack shelf for 16″ door opening, 5 bottle	$190
CWS-18	Wine rack shelf for 18″ door opening, 5 bottle	$206
06010158	Clip-on shelf divider for middle and top shelf	$50
06006013	Clip-on shelf divider for bottom shelf only	$50

Glastender, Inc. • 5400 North Michigan Road • Saginaw, MI • 48604-9780
800.748.0423 • 989.752.4275 • Fax 989.752.4444 • www.glastender.com

Coolers - Two Zone, Side Serviced, Bar Profile*

Draft Beverage Compatible

*NOTE: C2SB coolers are manufactured to order and are not returnable.

Select Configurable Options:

Voltage

120V/60HZ	No charge
220V/50HZ (export voltage)	$322

Temperature

Beer/White wine - 34° to 40°/ 50° to 55°	No charge
Beer/Red wine - 34° to 40°/ 60° to 65°	No charge
White/Red wine - 50° to 55°/ 60° to 65°	No charge

Refrigeration Compartment Location

Left	No charge
Right	No charge

Refrigeration Compartment Cover Finish

Black vinyl-clad	No charge
Stainless steel	No charge
Jeweled stainless steel	$244

Door/Drawer Options

NOTE: Select options for EACH Door/Drawer Section

Style and Finish - Per Section

Door - Black vinyl-clad	No charge
Door - Unlaminated	No charge
Door - Stainless steel	No charge
Door - Jeweled stainless	$265
Door - Laminated	$302
Door - Glass, black vinyl-clad	$587
Door - Glass, stainless steel	$587
Door - Glass, jeweled stainless	$852
Door - Glass, laminated	$889
Drawers - Black vinyl-clad	$2,430
Drawers - Unlaminated	$2,430
Drawers - Stainless steel	$2,430
Drawers - Jeweled stainless	$2,695
Drawers - Laminated	$2,732

Door Hinge Location - Per Door

Left	No charge
Right	No charge

Shelving - Per Door

Three adjustable shelves	No charge
Keg rack	No charge
Pull-out wine shelves:	
• w/upright & horizontal storage*	$2,687
• w/upright storage*	$1,793
• w/horizontal storage*	$3,359

*NOTE: Not available for 12" door opening models

Door Handle - Per Door/Drawer

Signature handle (doors only)	No charge
Pull-tab handle - stainless or black to match door; black for laminate	No charge
Tube handle	No charge



Optional pull-out wine shelves Horizontal (left) and upright (right) storage shown



Top Style

	36″	44″	48″
No finished top	No charge		
Stainless top	$545	$604	$631

Left Side Finish

Black vinyl-clad	No charge
Stainless Steel	No charge

Right Side Finish

Black vinyl-clad	No charge
Stainless Steel	No charge

Back Finish

	36″	44″	48″
Galvanized steel	No charge		
Stainless steel*	$289	$333	$355

*NOTE: Stainless steel back option also includes stainless steel sides.

LED Lighting Style

Bright white (7,000k), standard	No charge
Warm white (3,500k)	No charge
Amber (2,700k)	No charge
Blue	No charge

Leg and Stainless Steel Kick Rails

NOTE: Legs are required if kick rails are ordered.

	36″	44″	48″
6″ legs	$212	$212	$212
Front kick rail	$149	$161	$166
Left side kick rail	$133	$133	$133
Right side kick rail	$133	$133	$133

Casters

	36″	44″	48″
4-1/8″ casters	$191	$191	$191
2-7/8″ casters	$185	$185	$185
1-1/2″ casters	$326	$326	$326



Drawer pull-tab handle

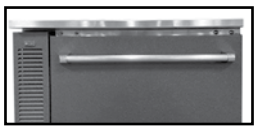

Drawer tube handle



Optional drawers include adjustable divider walls



Signature handle



Pull-tab handle



Tube handle

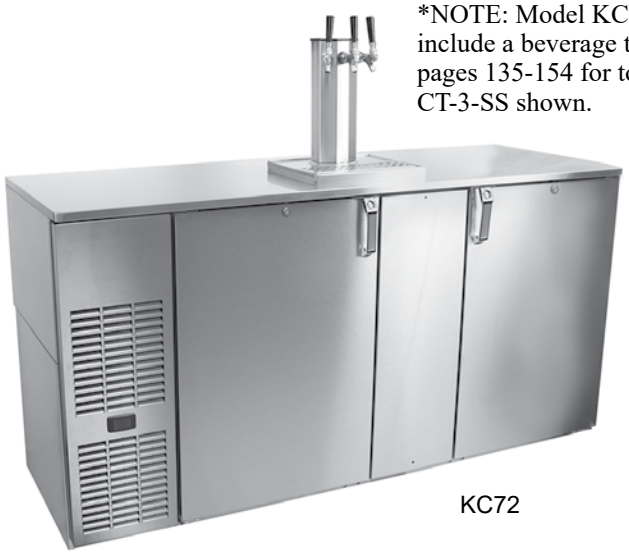

KC72

*NOTE: Model KC72 does not include a beverage tower. See pages 135-154 for tower options. CT-3-SS shown.



Product Information

(see KC72 Spec Sheet for complete details)

Standard Features:

- Self-contained
- Galvanized interior construction with stainless steel floor
- Stainless steel keg racks and 1/2″ thick high-impact polypropylene threshold scuff plates
- Wide center mullion provides additional storage capacity
- Listed to NSF Standard 7 for closed container products

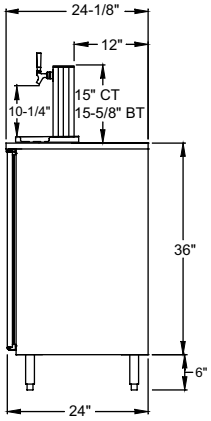

Side Elevation

72" Keg Cooler

Model	List	Length	Doors	Door Opening	Weight	Amps	HP	1/2 Barrel Kegs	1/6 Barrel Kegs
KC72*	$10,261	72″	2	20″ W	410#	3.5	1/6	3	11

Base price only. See below for configurable options.

Select Configurable Options:

Voltage	
120V/60HZ	No charge
220V/50HZ (export voltage)	$322

Temperature	
Beer, 34° to 40°, standard	No charge
White wine, 50° to 55°	No charge
Red wine, 60° to 65°	No charge

Refrigeration Compartment Location	
Left	No charge
Right	No charge

Front Finish	
Black vinyl-clad	No charge
Stainless steel	No charge

Door Options	
NOTE: Select options for EACH Door Section	
Door Hinge Location - Per Door	
Left	No charge
Right	No charge
Door Handle - Per Door	
Signature handle	No charge
Pull-tab handle - stainless or black to match door; black for laminate	No charge
Tube handle	No charge

Top Style	
No finished top	No charge
Stainless top	$802

Left Side Finish	
Black vinyl-clad	No charge
Stainless Steel	No charge

Right Side Finish	
Black vinyl-clad	No charge
Stainless Steel	No charge

Back Finish	
Galvanized steel	No charge
Stainless steel*	$487

*NOTE: Stainless steel back option also includes stainless steel sides.

Leg and Stainless Steel Kick Rails	
NOTE: Legs are required if kick rails are ordered.	
6″ legs	$318
Front kick rail	$200
Left side kick rail	$133
Right side kick rail	$133

Casters	
4-1/8″ casters	$289
2-7/8″ casters	$277
1-1/2″ casters	$487



Signature handle



Pull-tab handle

Tube handle



Glastender

Glastender, Inc. • 5400 North Michigan Road • Saginaw, MI • 48604-9780
800.748.0423 • 989.752.4275 • Fax 989.752.4444 • www.glastender.com



Tee Tower shown
See pages 135 - 154 for complete information

Configuring Bar Profile Coolers for Draft Beverage Dispensing

All Glastender bar profile coolers can be configured for draft beverage dispensing. Please note that a minimum 17″ wide door opening is required for full size (i.e., 16″ diameter) 1/2 barrel kegs. Refer to the capacity statements in the Product Directory or Specification Sheet for the sizes and quantities of kegs each unit will hold.

Direct Draw Draft Beverage Towers

Glastender Beverage Towers include the stainless steel faucets and shanks necessary to dispense keg beer, wine, soda, coffee, or cocktails. See individual price pages for complete information.

Look for the Draft Beer Compatible logo



High Pressure Regulator Kits

High pressure regulators reduce the gas pressure from the primary source. A tank mount regulator attaches directly to a gas cylinder, while a wall mount regulator splices into gas tubing when the gas supply is used for more than one system. RKH-TN regulator kits are used If pre-blended CO_2 and nitrogen or pure nitrogen cylinders are being used. All high pressure regulator kits include 50 feet of braided nylon gas tubing.

Model	Description	List	Wgt
RKH-W	Wall mount, CO_2 or Nitrogen, single gauge	$386	15#
RKH-TC	Tank mount, CO_2, double gauge	$331	15#
RKH-TN	Tank mount, Nitrogen, double gauge	$447	15#

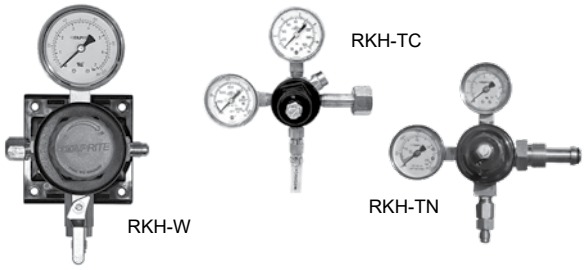

Additional Accessories

Model	Description	List	Wgt
03004240	1/2″ ID black drain line, per foot	$3.00	N/A
05000400	5/16″ ID red vinyl air line, per foot	$3.00	N/A
05000386	1/4″ ID nylon braided gas tubing, per foot	$1.00	N/A
05001066	D system keg coupler w/ss probe	$128.00	2#
05001026	D system keg coupler, low profile	$479.00	2#
05003763	S system keg coupler w/ss probe, for select imports	$128.00	2#
05002019	U System Keg Coupler, stainless probe, for Guinness & Harp	$375.00	2#
05000368	Lock for beer faucet	$149.00	2#
05000636	5# CO_2 tank (unfilled)	$490.00	15#
LCK	Line cleaning kit	$289.00	3#
06007084	Drain bottle	$59.00	2#

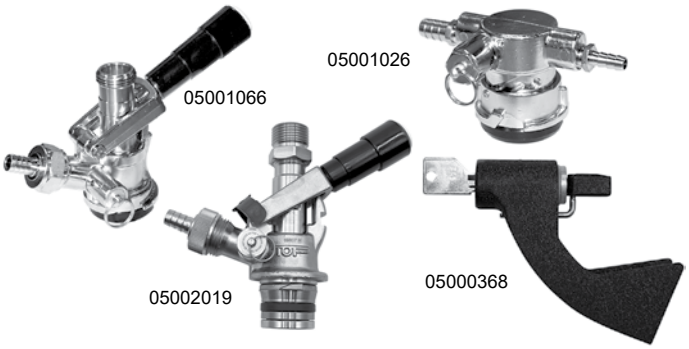

Low Pressure Regulator Kits

Low pressure regulator kits connect to the gas tubing exiting a high pressure regulator. If a 5 pound gas cylinder will be kept inside the cooler, a single gauge tank mounted RKL-TC or -TN will be required depending on the gas being used. All low pressure regulator kits include 6 feet of red gas tubing. For installations requiring more than one keg on tap, also order the appropriate size manifold kit. All manifold kits include 6 feet of red gas tubing per product, and the clamps required for connecting to keg couplers (sold separately).

Model	Description	List	Wgt
RKL-W	Wall mount, CO_2 or Nitrogen, single gauge	$350	7#
RKL-TC	Tank mount, CO_2, single gauge	$294	7#
RKL-TN	Tank mount, Nitrogen, single gauge	$390	7#
MAN2	Two product manifold kit	$209	2#
MAN3	Three product manifold kit	$265	3#
MAN4	Four product manifold kit	$330	4#
MAN5	Five product manifold kit	$449	5#
MAN6	Six product manifold kit	$534	6#

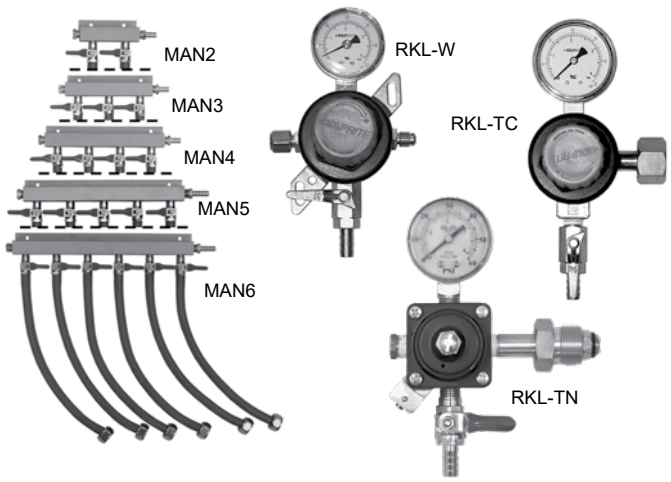

Tower Cooling Kits

Direct draw beverage towers are chilled by air from inside the host cooler. This is especially important for draft beer, as warm faucets cause the beer to foam.

Tower Cooling Kits

Model	Description	List	Wgt
TCK12-1	For 1 & 2-door coolers w/ one tower column	$281	3#
TCK12-2	For 1 & 2-door coolers w/ two tower columns	$562	6#
TCK34-1	For 3 & 4-door coolers w/ one tower column	$479	8#
TCK34-2	For 3 & 4-door coolers w/ two tower columns	$615	11#
TCKR-1	For remote coolers w/ one tower column	$281	3#
TCKR-2	For remote coolers w/ two tower columns	$562	6#



CS1FB60 with compressor left, stainless doors and top

Coolers - Shallow Depth, One Zone, Front Serviced, Bar Profile

Model	List	Length	Doors	Door Opening	Weight	Amps	HP	LongNeck Cases	750mlWine Bottles
CS1FB52	$9,549	52″	2	16″ W	300#	3.5	1/6	8.1	77
CS1FB60	$9,811	60″	2	20″ W	325#	3.5	1/6	10.6	102
CS1FB72	$11,355	72″	3	16″ W	370#	3.5	1/6	12.8	121
CS1FB84	$11,828	84″	3	20″ W	410#	3.5	1/6	16.6	162

Base price only. See next page for configurable options.

*NOTE: CS1FB units are manufactured to order and are not returnable.

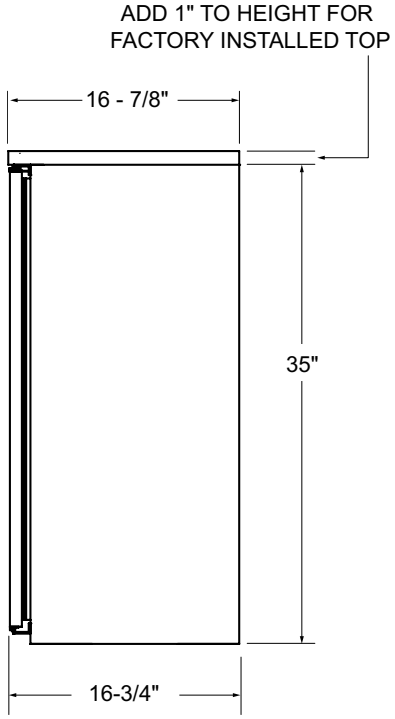

Side Elevation

Product Information

(see CS1FB Spec Sheet for complete details)

Standard Features:

- Self contained
- All stainless steel interior construction
- Three adjustable coated shelves per door included
- Listed as NSF Standard 7 for open food as a display refrigerator

Glastender

Glastender, Inc. • 5400 North Michigan Road • Saginaw, MI • 48604-9780
800.748.0423 • 989.752.4275 • Fax 989.752.4444 • www.glastender.com

*NOTE: CS1FB units are manufactured to order and are not returnable.

Select Configurable Options:

Voltage	
120V/60HZ	No charge
220V/50HZ (export voltage)	$322

Temperature	
Beer / Food, 34° to 40°, standard	No charge
White wine, 50° to 55°	No charge
Red wine, 60° to 65°	No charge

Refrigeration Compartment Location	
Left	No charge
Right	No charge

RefrigerationCompartmentCoverFinish	
Black vinyl-clad	No charge
Unlaminated	No charge
Stainless steel	No charge
Jeweled stainless steel	$244
Laminated	$284

Door Options

NOTE: Select options for EACH Door Section

Style and Finish - Per Section	
Door - Black vinyl-clad	No charge
Door - Unlaminated	No charge
Door - Stainless steel	No charge
Door - Jeweled stainless	$265
Door - Laminated	$302
Door - Glass, black vinyl-clad	$587
Door - Glass, stainless steel	$587
Door - Glass, jeweled stainless	$852
Door - Glass, laminated	$889

Door Hinge Location - Per Door	
Left	No charge
Right	No charge

Door Handle - Per Door	
Signature handle	No charge
Pull-tab handle - stainless or black to match door; black for laminate	No charge
Tube handle	No charge

Top Style	52″	60″	72″	84″
No finished top	No charge			
Stainless top	$660	$717	$802	$888

Left Side Finish	
Black vinyl-clad	No charge
Stainless Steel	No charge

Right Side Finish	
Black vinyl-clad	No charge
Stainless Steel	No charge

Back Finish	52″	60″	72″	84″
Galvanized steel	No charge			
Stainless steel*	$377	$421	$487	$553

*NOTE: Stainless steel back option also includes stainless steel sides.

LED Lighting Style	
Bright white (7,000k), standard	No charge
Warm white (3,500k)	No charge
Amber (2,700k)	No charge
Blue	No charge

Leg and Stainless Steel Kick Rails

NOTE: Legs are required if kick rails are ordered.

	52″	60″	72″	84″
6″ legs	$212	$212	$318	$318
Front kick rail	$170	$182	$200	$214
Left side kick rail	$133	$133	$133	$133
Right side kick rail	$133	$133	$133	$133

Casters

	52″	60″	72″	84″
4-1/8″ casters	$191	$191	$289	$289
2-7/8″ casters	$185	$185	$277	$277
1-1/2″ casters	$326	$326	$487	$487



Signature handle



Pull-tab handle



Tube handle



CS1RB60 with refrigeration hook up left, stainless doors and top

Product Information

(see CS1RB Spec Sheet for complete details)

Standard Features:

- DOE 2017 compliant
- Remote unit
- All stainless steel interior construction
- Three adjustable coated shelves per door included
- Listed to NSF Standard 7 for open food as a storage refrigerator

Coolers - Shallow Depth, One Zone, Remote, Bar Profile*

Model	List	Length	Doors	Weight	BTU /Hr	Long Neck Cases	750ml Wine Bottles
CS1RB40*	$6,680	40″	2	260#	1,075	7.1	66
CS1RB48*	$7,145	48″	2	270#	1,175	8.8	86
CS1RB60*	$8,868	60″	3	370#	1,350	11.8	110
CS1RB72*	$9,654	72″	3	385#	1.450	14.3	146
CS1RB80*	$11,273	80″	4	475#	1,650	16.4	152

Base price only. See next page for configurable options.

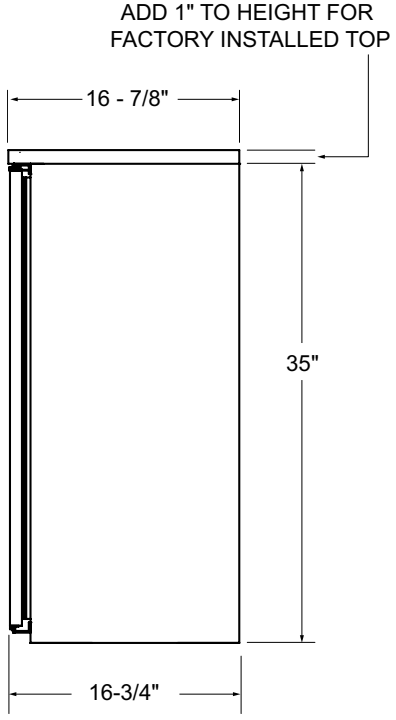

Side Elevation

*NOTE: CS1RB units are manufactured to order and are not returnable.

Accessory For Remote Cooler Cabinet

Model	Description	List	Wt
SVC	Solenoid valve and coil kit, for remote unit	$332	6#
SVC-L	Solenoid valve and coil kit with factory installation, for remote unit	$701	6#

Glastender

Glastender, Inc. • 5400 North Michigan Road • Saginaw, MI • 48604-9780
800.748.0423 • 989.752.4275 • Fax 989.752.4444 • www.glastender.com

*NOTE: CS1RB units are manufactured to order and are not returnable.

Select Configurable Options:

Voltage	
120V/60HZ	No charge
220V/50HZ (export voltage)	$164

Temperature	
Beer / Food, 34° to 40°, standard	No charge
White wine, 50° to 55°	No charge
Red wine, 60° to 65°	No charge

Expansion Valve Type	
R448A or R449A	No charge
R134a or R513A	No charge
R404A or R452A	No charge
R407A or R407F	No charge

Refrigeration Hook-Up Location	
Left	No charge
Right	No charge

Door Options	
NOTE: Select options for EACH Door Section	
Style and Finish - Per Door	
Door - Black vinyl-clad	No charge
Door - Unlaminated	No charge
Door - Stainless steel	No charge
Door - Jeweled stainless	$265
Door - Laminated	$302
Door - Glass, black vinyl-clad	$587
Door - Glass, stainless steel	$587
Door - Glass, jeweled stainless	$852
Door - Glass, laminated	$889
Door Hinge Location - Per Door	
Left	No charge
Right	No charge
Door Handle - Per Door	
Signature handle	No charge
Pull-tab handle - stainless or black to match door; black for laminate	No charge
Tube handle	No charge

Top Style	40″	48″	60″	72″	80″
No finished top	No charge				
Stainless top	$573	$631	$717	$802	$860

Left Side Finish	
Black vinyl-clad	No charge
Stainless Steel	No charge

Right Side Finish	
Black vinyl-clad	No charge
Stainless Steel	No charge

Back Finish	40″	48″	60″	72″	80″
Galvanized steel	No charge				
Stainless steel*	$311	$355	$421	$487	$531

*NOTE: Stainless steel back option also includes stainless steel sides.

LED Lighting Style	
Bright white (7,000k), standard	No charge
Warm white (3,500k)	No charge
Amber (2,700k)	No charge
Blue	No charge

Leg and Stainless Steel Kick Rails

NOTE: Legs are required if kick rails are ordered.

	40″	48″	60″	72″	80″
6″ legs	$212	$212	$318	$318	$318
Front kick rail	$152	$166	$182	$200	$209
Left side kick rail	$133	$133	$133	$133	$133
Right side kick rail	$133	$133	$133	$133	$133



Signature handle



Pull-tab handle



Tube handle



C1FL60 with compressor left, and stainless doors and top

Product Information

(see C1FL Spec Sheet for complete details)

Standard Features:

- Self-contained
- All stainless steel interior construction
- Listed to NSF Standard 7 for open food as a storage refrigerator

*NOTE: C1FL units are manufactured to order and are not returnable.

Coolers - One Zone, Front Serviced, Low Profile*

Model	List	Length	Doors	Door Opening	Weight	Amps	HP	Long Neck 750ml Wine Cases	Long Neck 750ml Wine Bottles
C1FL32*	$7,180	32″	1	16″ W	220#	3.5	1/6	3.8	30
C1FL36*	$7.251	36″	1	20″ W	235#	3.5	1/6	5.2	42
C1FL52*	$9,416	52″	2	16″ W	300#	3.5	1/6	8.8	72
C1FL60*	$9,609	60″	2	20″ W	320#	3.5	1/6	11.5	84
C1FL72*	$11,321	72″	3	16″ W	390#	7.0	1/4	14.0	114
C1FL84*	$11,554	84″	3	20″ W	420#	7.0	1/4	18.0	132
C1FL92*	$13,594	92″	4	16″ W	550#	7.0	1/4	19.2	156
C1FL108*	$13,872	108″	4	20″ W	570#	7.0	1/4	24.5	180

Base price only. See next page for configurable options.



CWS-20
Wine rack shelf for 20″ door opening

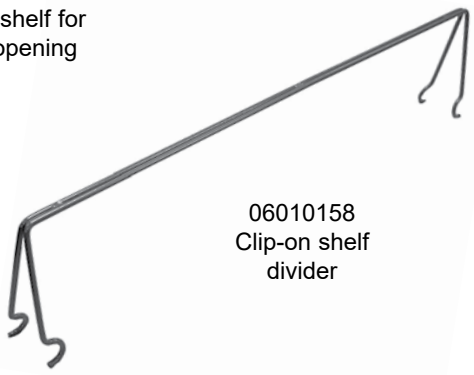

06010158
Clip-on shelf divider

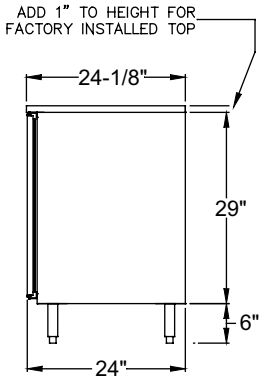

Side Elevation

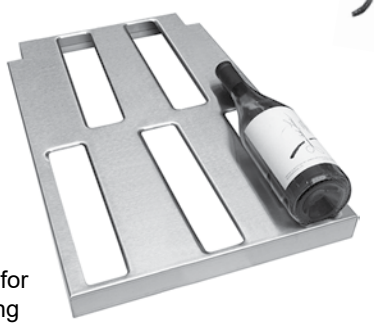

CWS-16
Wine rack shelf for 16″ door opening

Accessories

Model	Description	List
CWS-16	Wine rack shelf for 16″ door opening, 5 bottle	$190
CWS-20	Wine rack shelf for 20″ door opening, 7 bottle	$215
06010158	Clip-on shelf divider	$50

Glastender, Inc. • 5400 North Michigan Road • Saginaw, MI • 48604-9780
800.748.0423 • 989.752.4275 • Fax 989.752.4444 • www.glastender.com

Coolers - One Zone, Front Serviced, Low Profile*

*NOTE: C1FL units are manufactured to order and are not returnable.

Select Configurable Options:

Voltage

120V/60HZ	No charge
220V/50HZ (export voltage)	$322

Temperature

Beer / Food, 34° to 40°, standard	No charge
White wine, 50° to 55°	No charge
Red wine, 60° to 65°	No charge

Refrigeration Compartment Location

Left	No charge
Right	No charge

Refrigeration Compartment Cover Finish

Black vinyl-clad	No charge
Unlaminated	No charge
Stainless steel	No charge
Jeweled stainless steel	$244
Laminated	$284

Door Options

NOTE: Select options for EACH Door Section

Style and Finish - Per Section

Door - Black vinyl-clad	No charge
Door - Unlaminated	No charge
Door - Stainless steel	No charge
Door - Jeweled stainless	$265
Door - Laminated	$302
Door - Glass, black vinyl-clad	$587
Door - Glass, stainless steel	$587
Door - Glass, jeweled stainless	$852
Door - Glass, laminated	$889

Door Hinge Location - Per Door

Left	No charge
Right	No charge

Shelving - Per Door

Two adjustable shelves	No charge
Pull-out wine shelves:	
• w/upright and horizontal storage	$2,206
• w/horizontal storage*	$2,942

*Note: Not available for door next to the compressor compartment

Door Handle - Per Door

Signature handle	No charge
Pull-tab handle - stainless or black to match door; black for laminate	No charge
Tube handle	No charge

Top Style

	32″	36″	52″	60″	72″	84″	92″	108″
No finished top	No charge							
Stainless top	$518	$545	$660	$717	$802	$888	$945	$1,062
Drainboard top	$860	$912	$1,111	$1,212	$1,358	$1,508	$1,610	$1,807

4″ High Stainless Splashes

	32″	36″	52″	60″	72″	84″	92″	108″
NOTE: Can only be ordered with stainless steel top								
Backsplash	$183	$195	$228	$243	$270	$294	$312	$345
Left side splash	$169	$169	$169	$169	$169	$169	$169	$169
Right side splash	$169	$169	$169	$169	$169	$169	$169	$169

Left Side Finish

Black vinyl-clad	No charge
Stainless Steel	No charge

Right Side Finish

Black vinyl-clad	No charge
Stainless Steel	No charge

Back Finish

	32″	36″	52″	60″	72″	84″	92″	108″
Galvanized steel	No charge							
Stainless steel*	$267	$289	$377	$421	$487	$553	$597	$685

*NOTE: Stainless steel back option also includes stainless steel sides.

LED Lighting Style

Bright white (7,000k), standard	No charge
Warm white (3,500k)	No charge
Amber (2,700k)	No charge
Blue	No charge

Leg and Stainless Steel Kick Rails

NOTE: Legs are required if kick rails are ordered.

	32″	36″	52″	60″	72″	84″	92″	108″
6″ legs	$265	$265	$212	$212	$318	$318	$318	$318
Front kick rail	$144	$149	$170	$182	$200	$214	$226	$245
Left side kick rail	$133	$133	$133	$133	$133	$133	$133	$133
Right side kick rail	$133	$133	$133	$133	$133	$133	$133	$133

Casters

	32″	36″	52″	60″	72″	84″	92″	108″
4-1/8″ casters	$234	$234	$191	$191	$289	$289	$289	$289
2-7/8″ casters	$231	$231	$185	$185	$277	$277	$277	$277
1-1/2″ casters	$406	$406	$326	$326	$487	$487	$487	$487



Optional pull-out wine shelves Horizontal (left) and upright (right) storage shown





Signature handle



Pull tab handle



Tube handle



C1RL96 with refrigeration hook up left, stainless doors and top

Product Information

(see C1RL Spec Sheets for complete details)

Standard Features:

- Remote unit
- All stainless steel interior construction
- Listed to NSF Standard 7 for open food as a storage refrigerator

Coolers - One Zone, Remote, Low Profile*

Model	List	Length	Doors	Door Opening	Weight	BTU /Hr	Long Neck 750ml Wine Cases	Long Neck 750ml Wine Bottles
C1RL24*	$5,439	24″ W	1	20″	170#	800	4.3	36
C1RL40*	$6,737	40″ W	2	16″	270#	1,000	8.2	72
C1RL48*	$6,875	48″ W	2	20″	275#	1,000	10.3	84
C1RL60*	$9,002	60″ W	3	16″	380#	1,300	12.8	120
C1RL72*	$9,186	72″ W	3	20″	390#	1,300	16.8	132
C1RL80*	$11,169	80″ W	4	16″	485#	1,600	18.0	166
C1RL96*	$11,397	96″ W	4	20″	500#	1,600	23.3	180

Base price only. See next page for configurable options.

*C1RL coolers are manufactured to order and are not returnable.

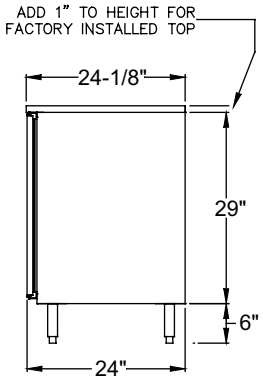

Side Elevation

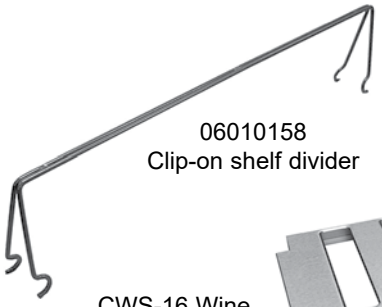

06010158
Clip-on shelf divider

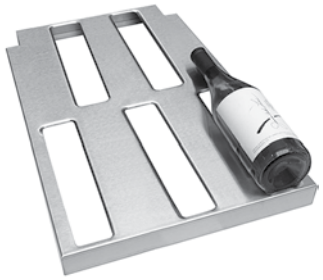

CWS-16 Wine rack shelf for 16″ door opening



CWS-20 Wine rack shelf for 20″ door opening

Accessories

Model	Description	List
CWS-16	Wine rack shelf for 16″ door opening, 5 bottle	$190
CWS-20	Wine rack shelf for 20″ door opening, 7 bottle	$215
06010158	Clip-on shelf divider	$50

Accesory For Remote Cooler Cabinet

Model	Description	List	Wt
SVC	Solenoid valve and coil kit, for remote unit	$332	6#
SVC-L	Solenoid valve and coil kit with factory installation, for remote unit	$701	6#

Glastender, Inc. • 5400 North Michigan Road • Saginaw, MI • 48604-9780
800.748.0423 • 989.752.4275 • Fax 989.752.4444 • www.glastender.com

*NOTE: C1RL coolers are manufactured to order and are not returnable.

Select Configurable Options:

Voltage	
120V/60HZ	No charge
220V/50HZ (export voltage)	$164

Temperature	
Beer / Food, 34° to 40°, standard	No charge
White wine, 50° to 55°	No charge
Red wine, 60° to 65°	No charge

Expansion Valve Type	
R448A or R449A	No charge
R134a or R513A	No charge
R404A or R452A	No charge
R407A or R407F	No charge

Refrigeration Hook-Up Location	
Left	No charge
Right	No charge

Door Options	
NOTE: Select options for EACH Door Section	
Style and Finish - Per Door	
Door - Black vinyl-clad	No charge
Door - Unlaminated	No charge
Door - Stainless steel	No charge
Door - Jeweled stainless	$265
Door - Laminated	$302
Door - Glass, black vinyl-clad	$587
Door - Glass, stainless steel	$587
Door - Glass, jeweled stainless	$852
Door - Glass, laminated	$889
Door Hinge Location - Per Door	
Left	No charge
Right	No charge
Shelving - Per Door	
Two adjustable shelves	No charge
Pull-out wine shelves w/upright and horizontal storage	$2,025
Door Handle - Per Door	
Signature handle	No charge
Pull-tab handle - stainless or black to match door; black for laminate	No charge
Tube handle	No charge

Top Style	24″	40″	48″	60″	72″	80″	96″
No finished top	No charge						
Stainless top	$462	$573	$631	$717	$802	$860	$974

4″ High Stainless Splashes	24″	40″	48″	60″	72″	80″	96″
NOTE: Can only be ordered with stainless steel top							
Backsplash	$169	$202	$216	$243	$270	$285	$319
Left side splash	$169	$169	$169	$169	$169	$169	$169
Right side splash	$169	$169	$169	$169	$169	$169	$169

Left Side Finish	
Black vinyl-clad	No charge
Stainless Steel	No charge

Right Side Finish	
Black vinyl-clad	No charge
Stainless Steel	No charge

Back Finish	24″	40″	48″	60″	72″	80″	96″
Galvanized steel	No charge						
Stainless steel*	$223	$311	$355	$421	$487	$531	$619

*NOTE: Stainless steel back option also includes stainless steel sides.

LED Lighting Style	
Bright white (7,000k), standard	No charge
Warm white (3,500k)	No charge
Amber (2,700k)	No charge
Blue	No charge

Leg and Stainless Steel Kick Rails	24″	40″	48″	60″	72″	80″	96″
NOTE: Legs are required if kick rails are ordered.							
6″ legs	$212	$212	$212	$318	$318	$318	$318
Front kick rail	$133	$152	$166	$182	$200	$209	$231
Left side kick rail	$133	$133	$133	$133	$133	$133	$133
Right side kick rail	$133	$133	$133	$133	$133	$133	$133





Optional pull-out wine shelves
Horizontal (left) and upright (right) storage shown



Signature handle



Pull-tab handle



Tube handle



C1SL48
with compressor left,
stainless doors and top

Product Information

(see C1SL Spec Sheet for complete details)

Standard Features:

- Self-contained
- All stainless steel interior construction
- Listed to NSF Standard 7 for open food as a storage refrigerator

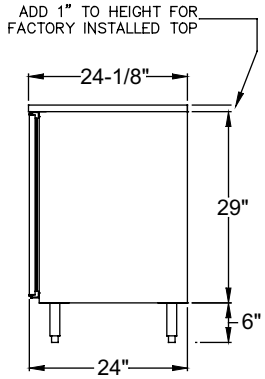

Side Elevation

Coolers - One Zone, Side Serviced, Low Profile

Model	List	Length	Doors	Door Opening	Weight	Amps	HP	Long Neck 750ml Wine Cases	Long Neck 750ml Wine Bottles**
C1SL20	$6,692	20″	1	12″ W	165#	2.75	1/8	2.8	28
C1SL24	$6,488	24″	1	17.5″ W	180#	2.75	1/8	4.5	36
C1SL28	$6,734	28″	1	20″ W	195#	2.75	1/8	5.1	42
C1SL36	$8,781	36″	2	12″ W	230#	2.75	1/8	6.9	54
C1SL44	$9,133	44″	2	16″ W	255#	2.75	1/8	8.9	72
C1SL48	$9,310	48″	2	18″ W	280#	2.75	1/8	10.3	84

Base price only. See next page for configurable options.

**Wine bottle capacity is based on adjustable shelves. Drawers are not intended for upright storage of wine bottles.

*NOTE: C1SL units are manufactured to order and are not returnable.

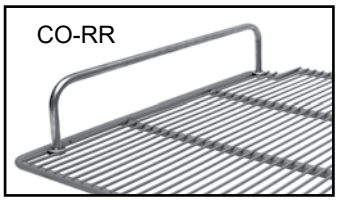

The CO-RR shelf retention rail should be used on all shelves adjacent to kegs. (CO-RR shown installed on shelf)



CWS-20 Wine rack shelf for 20″ door opening

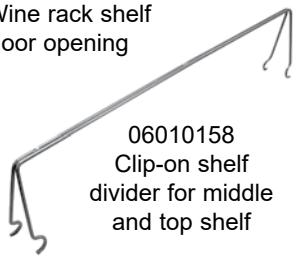

06010158
Clip-on shelf divider for middle and top shelf



DICP-17L

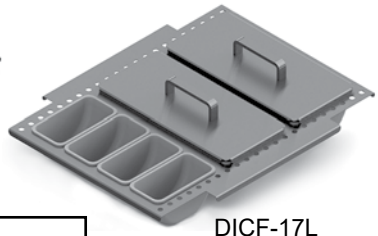

DICF-17L

Front covers removed for illustrative purposes



DIP-18
Pans not included

Accessories

Model	Description	List
CO-RR	Shelf retention rail	$81
CWS-12	Wine rack shelf for 12″ door opening, 3 bottle	$164
CWS-16	Wine rack shelf for 16″ door opening, 5 bottle	$190
CWS-17	Wine rack shelf for 17.5″ door opening, 5 bottle	$204
CWS-18	Wine rack shelf for 18″ door opening, 5 bottle	$206
CWS-20	Wine rack shelf for 20″ door opening, 7 bottle	$215
DICF-12L	Drawer insert, garnishes, full, 12″ door opening, low-profile cooler, 6 cups	$405
DICP-12L	Drawer insert, garnishes, partial, 12″ door opening, low-profile cooler, 4 cups	$305
DICF-16L	Drawer insert, garnishes, full, 16″ door opening, low-profile cooler, 12 cups	$596
DICP-16L	Drawer insert, garnishes, partial, 16″ door opening, low-profile cooler, 8 cups	$433
DICF-17L	Drawer insert, garnishes, full, 17.5″ door opening, low-profile cooler, 12 cups	$601
DICP-17L	Drawer insert, garnishes, partial, 17.5″ door opening, low-profile cooler, 8 cups	$435
DICF-18L	Drawer insert, garnishes, full, 18″ door opening, low-profile cooler, 12 cups	$607
DICP-18L	Drawer insert, garnishes, partial, 18″ door opening, low-profile cooler, 8 cups	$438
DICF-20L	Drawer insert, garnishes, full, 20″ door opening, low-profile cooler, 15 cups	$701
DICP-20L	Drawer insert, garnishes, partial, 20″ door opening, low-profile cooler, 10 cups	$501
DIP-17	Drawer insert for fractional stainless pans, 17.5" door opening (pans not included)	$271
DIP-18	Drawer insert for fractional stainless pans, 18" door opening (pans not included)	$277
DIP-20	Drawer insert for fractional stainless pans, 20" door opening (pans not included)	$301
06010158	Clip-on shelf divider	$50

Glastender, Inc. • 5400 North Michigan Road • Saginaw, MI • 48604-9780
800.748.0423 • 989.752.4275 • Fax 989.752.4444 • www.glastender.com

Select Configurable Options:

Voltage	
120V/60HZ	No charge
220V/50HZ (export voltage)	$322

Temperature	
Beer / Food, 34° to 40°, standard	No charge
White wine, 50° to 55°	No charge
Red wine, 60° to 65°	No charge

Refrigeration Compartment Location	
Left	No charge
Right	No charge

Refrigeration Compartment Cover Finish	
Black vinyl-clad	No charge
Stainless steel	No charge
Jeweled stainless steel	$244

Door/Drawer Options	
NOTE: Select options for EACH Door/Drawer Section	
Style and Finish - Per Section	
Door - Black vinyl-clad	No charge
Door - Unlaminated	No charge
Door - Stainless steel	No charge
Door - Jeweled stainless	$265
Door - Laminated	$302
Door - Glass, black vinyl-clad	$587
Door - Glass, stainless steel	$587
Door - Glass, jeweled stainless	$852
Door - Glass, laminated	$889
Drawers - Black vinyl-clad	$2,430
Drawers - Unlaminated	$2,430
Drawers - Stainless steel	$2,430
Drawers - Jeweled stainless	$2,695
Drawers - Laminated	$2,732
Door Hinge Location - Per Door	
Left	No charge
Right	No charge
Shelving - Per Door	
Two adjustable shelves	No charge
Pull-out wine shelves:	
• w/upright and horizontal storage*	$2,206
• w/horizontal storage*	$2,942
*Note: Not available for 12" door opening models	
Door Handle - Per Door/Drawer	
Signature handle (doors only)	No charge
Pull-tab handle - stainless or black to match door; black for laminate	No charge
Tube handle	No charge

*NOTE: C1SL units are manufactured to order and are not returnable.



Optional pull-out wine shelves Horizontal (left) and upright (right) storage shown



Top Style	20″	24″	28″	36″	44″	48″
No finished top	No charge					
Stainless top	$433	$462	$488	$545	$604	$631
Drainboard top	$711	$761	$811	$912	$1,010	$1,062

4″ High Stainless Splashes	20″	24″	28″	36″	44″	48″
NOTE: Can only be ordered with stainless steel top						
Backsplash	$164	$169	$179	$195	$210	$216
Left side splash	$169	$169	$169	$169	$169	$169
Right side splash	$169	$169	$169	$169	$169	$169

Left Side Finish	
Black vinyl-clad	No charge
Stainless Steel	No charge

Right Side Finish	
Black vinyl-clad	No charge
Stainless Steel	No charge

Back Finish	20″	24″	28″	36″	44″	48″
Galvanized steel	No charge					
Stainless steel*	$201	$223	$245	$289	$333	$355

*NOTE: Stainless steel back option also includes stainless steel sides.

LED Lighting Style	
Bright white (7,000k), standard	No charge
Warm white (3,500k)	No charge
Amber (2,700k)	No charge
Blue	No charge

Leg and Stainless Steel Kick Rails	20″	24″	28″	36″	44″	48″
NOTE: Legs are required if kick rails are ordered.						
6″ legs	$212	$212	$212	$212	$212	$212
Front kick rail	$129	$133	$140	$149	$161	$166
Left side kick rail	$133	$133	$133	$133	$133	$133
Right side kick rail	$133	$133	$133	$133	$133	$133

Casters	20″	24″	28″	36″	44″	48″
4-1/8″ casters	$191	$191	$191	$191	$191	$191
2-7/8″ casters	$185	$185	$185	$185	$185	$185
1-1/2″ casters	$326	$326	$326	$326	$326	$326



Drawer pull-tab handle



Drawer tube handle

Tube handle





Optional drawers include adjustable divider walls



Signature handle



Pull-tab handle

Bar Refrigeration



C1TH24F
with glass door
and adjustable shelves

Product Information

(see C1TH24F Spec Sheet for complete details)

Standard Features:

- Self-contained
- All stainless steel interior construction
- Tube handle
- Listed to NSF Standard 7 for open food as a storage refrigerator

Coolers - High Profile - Full Door

List	Length	Door	Door Opening	Weight	Amps	HP
$10,824**	24″	1	20″ W	350#	3.0	1/6

*High profile coolers are made to order and are not returnable
**Base price only. See below for configurable options

Capacities

12 oz. bottles, cases	14.7
750ml wine bottles	132
750ml wine bottles (horizontal pull-out)	104

Select Configurable Options:

Voltage

120V/60HZ	No charge
220V/50HZ (export voltage)	$322

Temperature

Beer / Food, 34° to 40°, standard	No charge
White wine, 50° to 55°	No charge
Red wine, 60° to 65°	No charge

Refrigeration Compartment Finish

Black vinyl-clad	No charge
Stainless steel	No charge

Door Option

Style and Finish

Black vinyl-clad	No charge
Unlaminated	No charge
Stainless steel	No charge
Laminated	$604
Glass, black vinyl-clad	$1,174
Glass, stainless steel	$1,174
Glass, laminated	$1,778

Door Hinge Location

Left	No charge
Right	No charge

Shelving

Adjustable, coated-wire shelves	No charge
Horizontal, pull-out wine shelves	$7,137

Left and Right Side Finish

Black vinyl-clad	No charge
Stainless Steel	No charge

Back Finish

Galvanized steel	No charge
Stainless steel*	$368

*NOTE: Stainless steel back option also includes stainless steel sides.

LED Lighting Style

Bright white (7,000k), standard	No charge
Warm white (3,500k)	No charge
Amber (2,700k)	No charge
Blue	No charge

Leg and Stainless Steel Kick Rails

NOTE: Legs are required if kick rails are ordered.

6″ legs	$212
Front kick rail	$133
Left side kick rail	$133
Right side kick rail	$133

Casters

4-1/8″ casters	$191
2-7/8″ casters	$185
1-1/2″ casters	$326



C1TH24H
with glass doors and
wine shelves

High Profile - One Zone - Two Half Height Doors

List	Length	Door	Door Opening	Weight	Amps	HP
$10,824**	24″	2	20″ W	350#	3.0	1/6

*High profile coolers are made to order and are not returnable
**Base price only. See below for configurable options

	Capacities	
Upper	12 oz. bottles, cases	6.7
	750ml wine bottles	60
	750ml wine bottles (horizontal pull-out)	48
Lower	12 oz. bottles, cases	8
	750ml wine bottles	72
	750ml wine bottles (horizontal pull-out)	48

Product Information

(see C1TH24H Spec Sheet for complete details)

Standard Features:

- Self-contained
- All stainless steel interior construction
- Tube handle
- Listed to NSF Standard 7 for open food as a storage refrigerator

Select Configurable Options:

Voltage	
120V/60HZ	No charge
220V/50HZ (export voltage)	$322

Temperature	
Beer / Food, 34° to 40°, standard	No charge
White wine, 50° to 55°	No charge
Red wine, 60° to 65°	No charge

Refrigeration Compartment Finish	
Black vinyl-clad	No charge
Stainless steel	No charge

Door/Drawer Option	
Style and Finish - Per Section	
Door - Black vinyl-clad	No charge
Door - Unlaminated	No charge
Door - Stainless steel	No charge
Door - Laminated	$302
Door - Glass, black vinyl-clad	$587
Door - Glass, stainless steel	$587
Door - Glass, laminated	$889
Drawers* - Black vinyl-clad	$2,430
Drawers* - Unlaminated	$2,430
Drawers* - Stainless steel	$2,430
Drawers* - Laminated	$2,732
*NOTE: Drawers are for lower section only	

Door Hinge Location	
Left	No charge
Right	No charge

Shelving - Per Section	
Adjustable, coated-wire shelves	No charge
Horizontal, pull-out wine shelves (upper)	$3,359
Horizontal, pull-out wine shelves (lower)	$3,359

Left and Right Side Finish	
Black vinyl-clad	No charge
Stainless Steel	No charge

Back Finish	
Galvanized steel	No charge
Stainless steel*	$368
*NOTE: Stainless steel back option also includes stainless steel sides.	

LED Lighting Style	
Bright white (7,000k), standard	No charge
Warm white (3,500k)	No charge
Amber (2,700k)	No charge
Blue	No charge

Leg and Stainless Steel Kick Rails	
NOTE: Legs are required if kick rails are ordered.	
6″ legs	$212
Front kick rail	$133
Left side kick rail	$133
Right side kick rail	$133

Casters	
4-1/8″ casters	$191
2-7/8″ casters	$185
1-1/2″ casters	$326



C2TH24H
with glass doors
and adjustable shelves

High Profile - Two Zone - Two Half Height Doors

List	Length	Door	Door Opening	Weight	Amps	HP
$12,511**	74″	2	20″ W	360#	3.0	1/6

*High profile coolers are made to order and are not returnable
**Base price only. See below for configurable options

Product Information

(see C2TH24H Spec Sheet for complete details)

Standard Features:

- Self-contained
- All stainless steel interior construction
- Tube handle
- Listed to NSF Standard 7 for open food as a storage refrigerator

	Capacities	
Upper	12 oz. bottles, cases	7.3
Upper	750ml wine bottles	66
Upper	750ml wine bottles (horizontal pull-out)	40
Lower	12 oz. bottles, cases	N/A
Lower	750ml wine bottles	72
Lower	750ml wine bottles (horizontal pull-out)	48

Select Configurable Options:

Voltage	
120V/60HZ	No charge
220V/50HZ (export voltage)	$322

Temperature	
Beer / Food, 34° to 40°, standard	No charge
White wine, 50° to 55°	No charge
Red wine, 60° to 65°	No charge

Refrigeration Compartment Finish	
Black vinyl-clad	No charge
Stainless steel	No charge

Door/Drawer Option	
Style and Finish - Per Section	
Door - Black vinyl-clad	No charge
Door - Unlaminated	No charge
Door - Stainless steel	No charge
Door - Laminated	$302
Door - Glass, black vinyl-clad	$587
Door - Glass, stainless steel	$587
Door - Glass, laminated	$889
Drawers* - Black vinyl-clad	$2,430
Drawers* - Unlaminated	$2,430
Drawers* - Stainless steel	$2,430
Drawers* - Laminated	$2,732
*NOTE: Drawers are for lower section only	
Door Hinge Location	
Left	No charge
Right	No charge

Shelving - Per Section	
Adjustable, coated-wire shelves	No charge
Horizontal, pull-out wine shelves (upper)	$2,942
Horizontal, pull-out wine shelves (lower)	$3,359

Left and Right Side Finish	
Black vinyl-clad	No charge
Stainless Steel	No charge

Back Finish	
Galvanized steel	No charge
Stainless steel*	$368
*NOTE: Stainless steel back option also includes stainless steel sides.	

LED Lighting Style	
Bright white (7,000k), standard	No charge
Warm white (3,500k)	No charge
Amber (2,700k)	No charge
Blue	No charge

Leg and Stainless Steel Kick Rails	
NOTE: Legs are required if kick rails are ordered.	
6″ legs	$212
Front kick rail	$133
Left side kick rail	$133
Right side kick rail	$133

Casters	
4-1/8″ casters	$191
2-7/8″ casters	$185
1-1/2″ casters	$326

CPC24 - Patented.
For more information visit:
https://www.glastender.com/patents



CPC24
Bottles not included

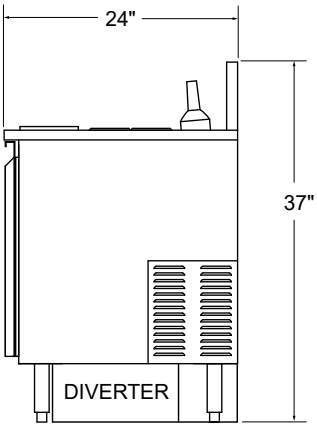

Side Elevation



Product Information

(see CPC Spec Sheet for complete details)

Standard Features:

- Self-contained
- Drink rail top with removable perforated insert
- Chilled garnish rail for 6 - 1/9 pans (4″ deep)
- Bottle rail for 8 elixir bottles
- Removable cutting board
- Locking drawer
- Interior drawer with capacity for 6 - 1/9 pans (4″ deep)
- 12 - 1/9 pans with lids included
- Insulated night cover
- 6″ legs with adjustable stainless steel bullet feet
- Listed to NSF Standard 7 as a refrigerated food preparation unit
- Base mount airflow diverter

Cocktail Prep Cooler

List	Length	Weight	Amps	HP
$10,387	24″	186#	2.20	1/8

Elevation Cocktail Prep Cooler

Patented



E-CPC24
Bottles not included

ELEVATION BY GLASTENDER

Product Information

(see E-CPC Spec Sheet for complete details)

- Self-contained
- Drink rail top with removable perforated insert
- Chilled garnish rail for six 1/9 pans (4″ deep)
- Removable cutting board
- Locking drawer
- Interior drawer with capacity for six 1/9 pans (4″ deep)
- 1/9 pans with lids included
- Insulated night cover
- Adjustable stainless steel bullet feet

Elevation Cocktail Prep Cooler

Model	List	Length	Weight
E-CPC24	$10,944	24″	186#



CP1FB72 with compressor left, stainless doors and top

Coolers - Pass-Thru, One Zone, Front Serviced, Bar Profile*

Model	List	Length	Doors	Door Opening	Weight	Amps	HP	LongNeck Cases	750mlWine Bottles
CP1FB32*	$9,852	32″	2	16″ w	320#	3.5	1/6	6.6	67
CP1FB36*	$9,954	36″	2	20″ w	325#	3.5	1/6	8.8	79
CP1FB52*	$13,055	52″	4	16″ w	435#	3.5	1/6	14.6	129
CP1FB60*	$13,457	60″	4	20″ w	445#	3.5	1/6	19.1	177
CP1FB72*	$17,043	72″	6	16″ w	580#	7.0	1/4	23.1	209
CP1FB84*	$17,570	84″	6	20″ w	595#	7.0	1/4	29.9	271

Base price only. See next page for configurable options.

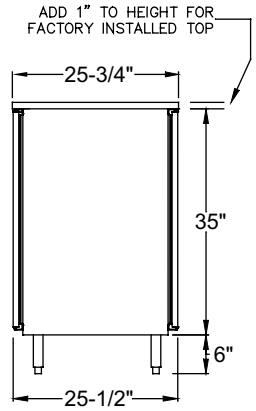

Side Elevation

*NOTE: CP1FB coolers are manufactured to order and are not returnable.

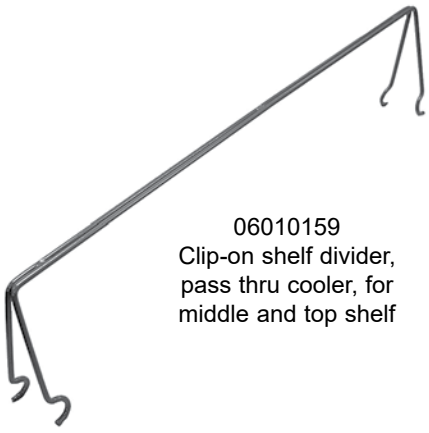

06010159
Clip-on shelf divider, pass thru cooler, for middle and top shelf

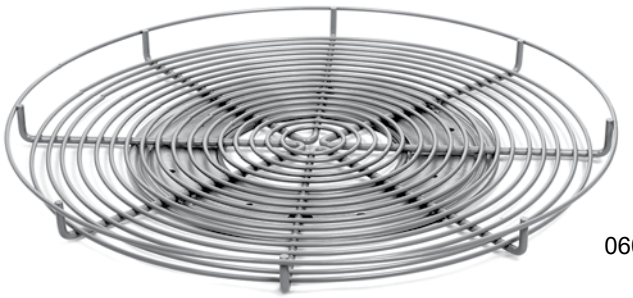

06009785

In a typical cooler, only the front row of bottles is easy to access. Glastender's rotary wine shelf increases access by 270% (16 vs. 6 bottles).

The rotary wine shelf is for use with CP1FB36, CP1FB60, and CP1FB84 model coolers. Two rotary shelves can be used behind each 20″ door opening, where they sit on two standard cooler shelves. Each rotary shelf holds up to 29 wine bottles (750ml).

Product Information

(see CP1FB Spec Sheet for complete details)

Standard Features:

- Self-contained
- All stainless steel interior construction
- Three adjustable coated shelves per section
- Listed to NSF Standard 7 for open food as a storage refrigerator

Accessories

Model	Description	List
06009785	Rotary wine shelf (20″ door opening ONLY)	$316
CWS-16P	Wine rack shelf for 16″ door opening, 5 bottle	$206
CWS-20P	Wine rack shelf for 20″ door opening, 7 bottle	$234
06010159	Clip-on shelf divider for middle and top shelf	$50
06006013	Clip-on shelf divider for bottom shelf only	$50

Glastender, Inc. • 5400 North Michigan Road • Saginaw, MI • 48604-9780
800.748.0423 • 989.752.4275 • Fax 989.752.4444 • www.glastender.com

Select Configurable Options:

*NOTE: CP1FB coolers are manufactured to order and are not returnable.

Voltage

120V/60HZ	No charge
220V/50HZ (export voltage)	$322

Temperature

Beer / Food, 34° to 40°, standard	No charge
White wine, 50° to 55°	No charge
Red wine, 60° to 65°	No charge

Refrigeration Compartment Location

Left	No charge
Right	No charge

Refrigeration Compartment Cover Finish

NOTE: Specify and add for both the front and the back	
Black vinyl-clad	No charge
Unlaminated	No charge
Stainless steel	No charge
Jeweled stainless steel	$244
Laminated	$284

Door Options

NOTE: Select options for EACH Door

Style and Finish - Per Door

Door - Black vinyl-clad	No charge
Door - Unlaminated	No charge
Door - Stainless steel	No charge
Door - Jeweled stainless	$265
Door - Laminated	$302
Door - Glass, black vinyl-clad	$587
Door - Glass, stainless steel	$587
Door - Glass, jeweled stainless	$852
Door - Glass, laminated	$889

Door Hinge Location - Per Door

Left	No charge
Right	No charge

Door Handle - Per Door

Signature handle	No charge
Pull-tab handle - stainless or black to match door; black for laminate	No charge
Tube handle	No charge

Top Style

	32″	36″	52″	60″	72″	84″
No finished top			No charge			
Stainless top	$590	$625	$764	$833	$939	$1,041

Left Side Finish

Black vinyl-clad	No charge
Stainless Steel	No charge

Right Side Finish

Black vinyl-clad	No charge
Stainless Steel	No charge

LED Lighting Style

Bright white (7,000k), standard	No charge
Warm white (3,500k)	No charge
Amber (2,700k)	No charge
Blue	No charge

Leg and Stainless Steel Kick Rails

NOTE: Legs are required if kick rails are ordered.

	32″	36″	52″	60″	72″	84″
6″ legs	$265	$265	$212	$212	$318	$318
Front kick rail	$144	$149	$170	$182	$200	$214
Back kick rail	$144	$149	$170	$182	$200	$214
Left side kick rail	$133	$133	$133	$133	$133	$133
Right side kick rail	$133	$133	$133	$133	$133	$133

Casters

	32″	36″	52″	60″	72″	84″
4-1/8″ casters	$234	$234	$191	$191	$289	$289
2-7/8″ casters	$231	$231	$185	$185	$277	$277
1-1/2″ casters	$406	$406	$326	$326	$487	$487



Signature handle



Pull-tab handle



Tube handle



CP1RB72 with refrigeration hook up left, stainless doors and top

Product Information

(see CP1RB Spec Sheet for complete details)

Standard Features:

- Remote unit
- All stainless steel interior construction
- Three adjustable coated shelves per section
- Listed to NSF Standard 7 for open food as a storage refrigerator

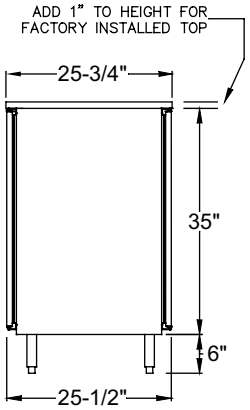

Side Elevation

Coolers - Pass-Thru, One Zone, Remote, Bar Profile*

Model	List	Length	Doors	Door Opening	Weight	BTU /Hr	LongNeck Cases	750mlWine Bottles**
CP1RB24*	$7,072	24″	2	20″	225#	950	7.7	72
CP1RB40*	$8,944	40″	4	16″	355#	1,600	13.1	114
CP1RB48*	$9,224	48″	4	20″	365#	1,600	17.6	156
CP1RB60*	$12,765	60″	6	16″	495#	2,000	21.6	194
CP1RB72*	$13,159	72″	6	20″	510#	2,000	28.3	253

Base price only. See next page for configurable options.

*NOTE:
CP1RB coolers are manufactured to order and are not returnable.

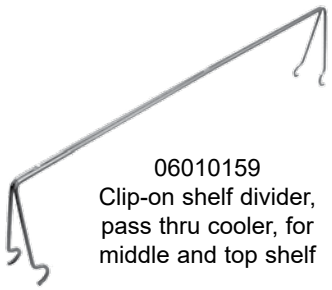

06010159
Clip-on shelf divider, pass thru cooler, for middle and top shelf

Accessories

Model	Description	List
CWS-16P	Wine rack shelf for 16″ door opening, 5 bottles	$206
CWS-20P	Wine rack shelf for 20″ door opening, 7 bottles	$234
06010159	Clip-on shelf divider for middle and top shelf	$50
06006013	Clip-on shelf divider for bottom shelf only	$50

Accessory For Remote Cooler Cabinet

Model	Description	List	Wt
SVC	Solenoid valve and coil kit, for remote unit	$332	6#
SVC-L	Solenoid valve and coil kit with factory installation, for remote unit	$701	6#

Glastender, Inc. • 5400 North Michigan Road • Saginaw, MI • 48604-9780
800.748.0423 • 989.752.4275 • Fax 989.752.4444 • www.glastender.com

*NOTE: CP1RB coolers are manufactured to order and are not returnable.

Select Configurable Options:

Voltage

120V/60HZ	No charge
220V/50HZ (export voltage)	$164

Temperature

Beer / Food, 34° to 40°, standard	No charge
White wine, 50° to 55°	No charge
Red wine, 60° to 65°	No charge

Expansion Valve Type

R448A or R449A	No charge
R134a or R513A	No charge
R404A or R452A	No charge
R407A or R407F	No charge

Refrigeration Hook-Up Location

Left	No charge
Right	No charge

Door Options

NOTE: Select options for EACH Door Section

Style and Finish - Per Door

Door - Black vinyl-clad	No charge
Door - Unlaminated	No charge
Door - Stainless steel	No charge
Door - Jeweled stainless	$265
Door - Laminated	$302
Door - Glass, black vinyl-clad	$587
Door - Glass, stainless steel	$587
Door - Glass, jeweled stainless	$852
Door - Glass, laminated	$889

Door Hinge Location - Per Door

Left	No charge
Right	No charge

Door Handle - Per Door

Signature handle	No charge
Pull-tab handle - stainless or black to match door; black for laminate	No charge
Tube handle	No charge

Top Style

	24″	40″	48″	60″	72″
No finished top	No charge				
Stainless top	$520	$660	$729	$833	$939

Left Side Finish

Black vinyl-clad	No charge
Stainless Steel	No charge

Right Side Finish

Black vinyl-clad	No charge
Stainless Steel	No charge

LED Lighting Style

Bright white (7,000k), standard	No charge
Warm white (3,500k)	No charge
Amber (2,700k)	No charge
Blue	No charge

Leg and Stainless Steel Kick Rails

NOTE: Legs are required if kick rails are ordered.

	24″	40″	48″	60″	72″
6″ legs	$212	$212	$212	$318	$318
Front kick rail	$133	$152	$166	$182	$200
Back kick rail	$133	$152	$166	$182	$200
Left side kick rail	$133	$133	$133	$133	$133
Right side kick rail	$133	$133	$133	$133	$133



Signature handle



Pull-tab handle



Tube handle



CP1FL84 with compressor left, stainless doors and top

Coolers - Pass-Thru, One Zone, Front Serviced, Low Profile*

Model	List	Length	Doors	Door Opening	Weight	Amps	HP	LongNeck Cases	750mlWine Bottles
CP1FL32*	$9,554	32″	2	16″ W	315#	3.5	1/6	4.4	35
CP1FL36*	$9,654	36″	2	20″ W	320#	3.5	1/6	5.8	42
CP1FL52*	$12,517	52″	4	16″ W	425#	3.5	1/6	9.7	66
CP1FL60*	$12,787	60″	4	20″ W	435#	3.5	1/6	12.7	90
CP1FL72*	$16,338	72″	6	16″ W	565#	7.0	1/4	15.4	106
CP1FL84*	$16,692	84″	6	20″ W	580#	7.0	1/4	19.9	137

Base price only. See next page for configurable options.

*NOTE: CP1FL units are manufactured to order and are not returnable.

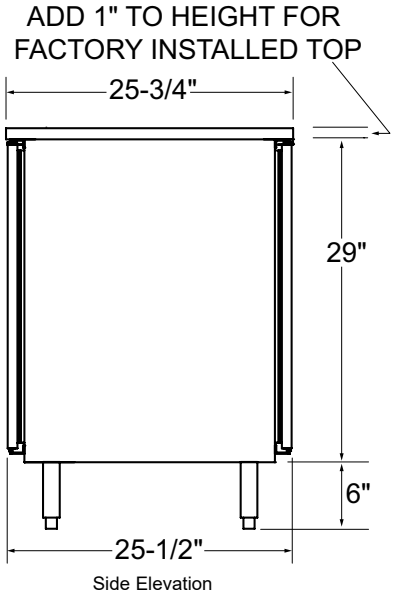

Side Elevation

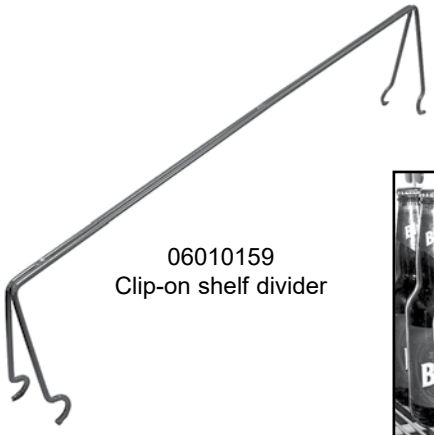

06010159
Clip-on shelf divider

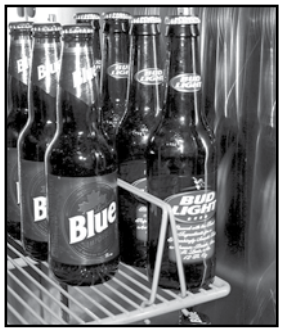

Product Information

(see CP1FL Spec Sheet for complete details)

Standard Features:

- Self-contained
- All stainless steel interior construction
- Two adjustable coated shelves per section
- Listed to NSF Standard 7 for open food as a storage refrigerator

Accessories

Model	Description	List
CWS-16P	Wine rack shelf for 16″ door opening, 5 bottle	$206
CWS-20P	Wine rack shelf for 20″ door opening, 7 bottle	$234
06010159	Clip-on shelf divider	$50

Glastender, Inc. • 5400 North Michigan Road • Saginaw, MI • 48604-9780
800.748.0423 • 989.752.4275 • Fax 989.752.4444 • www.glastender.com

*NOTE: CP1FL units are manufactured to order and are not returnable.

Select Configurable Options:

Voltage

120V/60HZ	No charge
220V/50HZ (export voltage)	$322

Temperature

Beer / Food, 34° to 40°, standard	No charge
White wine, 50° to 55°	No charge
Red wine, 60° to 65°	No charge

Refrigeration Compartment Location

Left	No charge
Right	No charge

Refrigeration Compartment Cover Finish

NOTE: Specify and add for both the front and the back	
Black vinyl-clad	No charge
Unlaminated	No charge
Stainless steel	No charge
Jeweled stainless steel	$244
Laminated	$284

Door Options

NOTE: Select options for EACH Door Section

Style and Finish - Per Section

Door - Black vinyl-clad	No charge
Door - Unlaminated	No charge
Door - Stainless steel	No charge
Door - Jeweled stainless	$265
Door - Laminated	$302
Door - Glass, black vinyl-clad	$587
Door - Glass, stainless steel	$587
Door - Glass, jeweled stainless	$852
Door - Glass, laminated	$889

Door Hinge Location - Per Door

Left	No charge
Right	No charge

Door Handle - Per Door

Signature handle	No charge
Pull-tab handle - stainless or black to match door; black for laminate	No charge
Tube handle	No charge

Top Style

	32″	36″	52″	60″	72″	84″
No finished top			No charge			
Stainless top	$590	$625	$764	$833	$939	$1,041

Left Side Finish

Black vinyl-clad	No charge
Stainless Steel	No charge

Right Side Finish

Black vinyl-clad	No charge
Stainless Steel	No charge

LED Lighting Style

Bright white (7,000k), standard	No charge
Warm white (3,500k)	No charge
Amber (2,700k)	No charge
Blue	No charge

Leg and Stainless Steel Kick Rails

NOTE: Legs are required if kick rails are ordered.

	32″	36″	52″	60″	72″	84″
6″ legs	$265	$265	$212	$212	$318	$318
Front kick rail	$144	$149	$170	$182	$200	$214
Back kick rail	$144	$149	$170	$182	$200	$214
Left side kick rail	$133	$133	$133	$133	$133	$133
Right side kick rail	$133	$133	$133	$133	$133	$133

Casters

	32″	36″	52″	60″	72″	84″
4-1/8″ casters	$234	$234	$191	$191	$289	$289
2-7/8″ casters	$231	$231	$185	$185	$277	$277
1-1/2″ casters	$406	$406	$326	$326	$487	$487



Signature handle



Pull-tab handle



Tube handle



CP1RL72 with refrigeration hook up left, stainless doors and top

Product Information

(see CP1RL Spec Sheet for complete details)

Standard Features:

- Remote unit
- All stainless steel interior construction
- Two adjustable coated shelves per section
- Listed to NSF Standard 7 for open food as a storage refrigerator

Coolers - Pass-Thru, One Zone, Remote, Low Profile*

Model	List	Length	Doors	Door Opening	Weight	BTU /Hr	LongNeck Cases	750mlWine Bottles**
CP1RL24*	$6,861	24″	2	20″	220#	850	4.7	42
CP1RL40*	$8,576	40″	4	16″	350#	1,600	8.2	66
CP1RL48*	$8,762	48″	4	20″	355#	1,600	11.8	90
CP1RL60*	$12,238	60″	6	16″	485#	2,000	13.8	106
CP1RL72*	$12,501	72″	6	20″	495#	2,000	18.3	137

Base price only. See next page for configurable options.

*NOTE:
CP1RL coolers are manufactured to order and are not returnable.

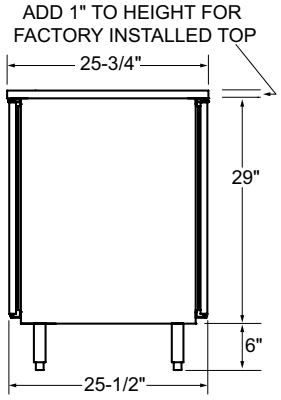

Side Elevation

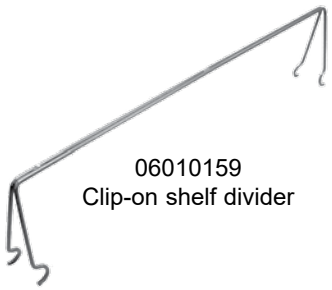

06010159
Clip-on shelf divider

Accessories

Model	Description	List
CWS-16P	Wine rack shelf for 16″ door opening, 5 bottle	$206
CWS-20P	Wine rack shelf for 20″ door opening, 7 bottle	$234
06010159	Clip-on shelf divider	$50

Accessory For Remote Cooler Cabinet

Model	Description	List	Wt
SVC	Solenoid valve and coil kit, for remote unit	$332	6#
SVC-L	Solenoid valve and coil kit with factory installation, for remote unit	$701	6#

Glastender
Glastender, Inc. • 5400 North Michigan Road • Saginaw, MI • 48604-9780
800.748.0423 • 989.752.4275 • Fax 989.752.4444 • www.glastender.com

*NOTE: CP1RL coolers are manufactured to order and are not returnable.

Select Configurable Options:

Voltage

120V/60HZ	No charge
220V/50HZ (export voltage)	$164

Temperature

Beer / Food, 34° to 40°, standard	No charge
White wine, 50° to 55°	No charge
Red wine, 60° to 65°	No charge

Expansion Valve Type

R448A or R449A	No charge
R134a or R513A	No charge
R404A or R452A	No charge
R407A or R407F	No charge

Refrigeration Hook-Up Location

Left	No charge
Right	No charge

Door Options

NOTE: Select options for EACH Door Section

Style and Finish - Per Door

Door - Black vinyl-clad	No charge
Door - Unlaminated	No charge
Door - Stainless steel	No charge
Door - Jeweled stainless	$265
Door - Laminated	$302
Door - Glass, black vinyl-clad	$587
Door - Glass, stainless steel	$587
Door - Glass, jeweled stainless	$852
Door - Glass, laminated	$889

Door Hinge Location - Per Door

Left	No charge
Right	No charge

Door Handle - Per Door

Signature handle	No charge
Pull-tab handle - stainless or black to match door; black for laminate	No charge
Tube handle	No charge

Top Style

	24″	40″	48″	60″	72″
No finished top	No charge				
Stainless top	$520	$660	$729	$833	$939

Left Side Finish

Black vinyl-clad	No charge
Stainless Steel	No charge

Right Side Finish

Black vinyl-clad	No charge
Stainless Steel	No charge

LED Lighting Style

Bright white (7,000k), standard	No charge
Warm white (3,500k)	No charge
Amber (2,700k)	No charge
Blue	No charge

Leg and Stainless Steel Kick Rails

NOTE: Legs are required if kick rails are ordered.

	24″	40″	48″	60″	72″
6″ legs	$212	$212	$212	$318	$318
Front kick rail	$133	$152	$166	$182	$200
Back kick rail	$133	$152	$166	$182	$200
Left side kick rail	$133	$133	$133	$133	$133
Right side kick rail	$133	$133	$133	$133	$133



Signature handle



Pull-tab handle



Tube handle



F1FB36 with compressor left
and stainless steel door and top

Product Information

(see F1FB Spec Sheet for complete details)

Standard Features:

- Self-contained
- All stainless steel interior construction
- Models with door include three coated adjustable shelves
- Listed to NSF Standard 7

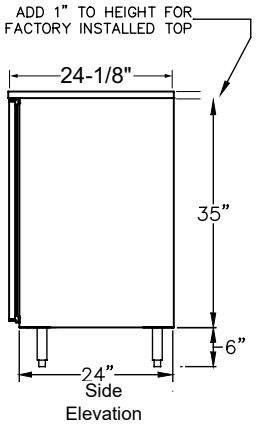

*NOTE: F1FB units are manufactured to order and are not returnable.

Frosters - One Zone, Front Serviced, Bar Profile

Model	List	Length	Doors	Door Opening	Weight	Amps	HP	10 Oz. Mugs	6" High PintGlasses
F1FB32	$8,281	32"	1	16" W	235#	6.5	1/3	120	96
F1FB36	$8,374	36"	1	20" W	250#	6.5	1/3	168	120

Base price only. See next page for configurable options.



DIP-18 shown
Pans not included

Accessories

Model	Description	List
DIP-20	Drawer insert for fractional stainless pans, 20" door opening (pans not included)	$301

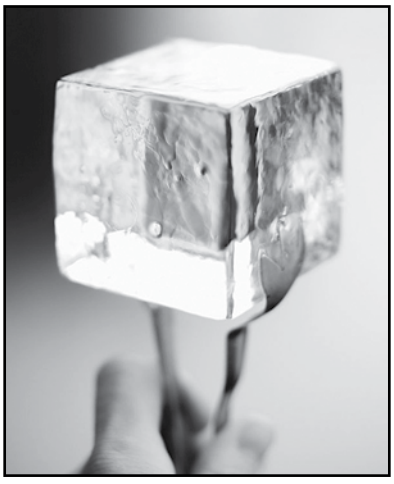

Capable of storing specialty cocktail ice

Glastender, Inc. • 5400 North Michigan Road • Saginaw, MI • 48604-9780
800.748.0423 • 989.752.4275 • Fax 989.752.4444 • www.glastender.com

Frosters - One Zone, Front Serviced, Bar Profile*

*NOTE: F1FB units are manufactured to order and are not returnable.

Select Configurable Options:

Voltage

120V/60HZ	No charge
220V/50HZ (export voltage)	$322

Refrigeration Compartment Location

Left	No charge
Right	No charge

Refrigeration Compartment Cover Finish

Black vinyl-clad	No charge
Unlaminated	No charge
Stainless steel	No charge
Jeweled stainless steel	$244
Laminated	$284

Door/Drawer Options

NOTE: Select options for EACH Door/Drawer Section

Style and Finish - Per Section

Door - Black vinyl-clad	No charge
Door - Unlaminated	No charge
Door - Stainless steel	No charge
Door - Jeweled stainless	$265
Door - Laminated	$302
Door - Glass, black vinyl-clad	$793
Door - Glass, stainless steel	$793
Door - Glass, jeweled stainless	$1,058
Door - Glass, laminated	$1,095
Drawers - Black vinyl-clad	$2,571
Drawers - Unlaminated	$2,571
Drawers - Stainless steel	$2,571
Drawers - Jeweled stainless	$2,836
Drawers - Laminated	$2,873

Door Hinge Location - Per Door

Left	No charge
Right	No charge

Door Handle - Per Door/Drawer

Signature handle (doors only)	No charge
Pull-tab handle - stainless or black to match door; black for laminate	No charge
Tube handle	No charge

Top Style

	32″	36″
No finished top	No charge	
Stainless top	$518	$545

Left Side Finish

Black vinyl-clad	No charge
Stainless Steel	No charge

Right Side Finish

Black vinyl-clad	No charge
Stainless Steel	No charge

Back Finish

	32″	36″
Galvanized steel	No charge	
Stainless steel*	$267	$289

*NOTE: Stainless steel back option also includes stainless steel sides.

LED Lighting Style

Bright white (7,000k), standard	No charge
Warm white (3,500k)	No charge
Amber (2,700k)	No charge
Blue	No charge

Leg and Stainless Steel Kick Rails

NOTE: Legs are required if kick rails are ordered.

	32″	36″
6″ legs	$265	$265
Front kick rail	$144	$149
Left side kick rail	$133	$133
Right side kick rail	$133	$133

Casters

	32″	36″
4-1/8″ casters	$234	$234
2-7/8″ casters	$231	$231
1-1/2″ casters	$406	$406



Optional drawers include adjustable divider walls



Drawer pull-tab handle

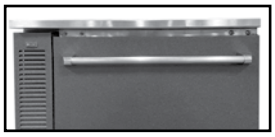

Drawer tube handle



Signature handle



Pull-tab handle



Tube handle



F1FL36 with compressor left
and stainless steel door and top

Product Information

(see F1FL Spec Sheet for complete details)

Standard Features:

- Self-contained
- All stainless steel interior construction
- Includes three adjustable coated shelves
- Listed to NSF Standard 7

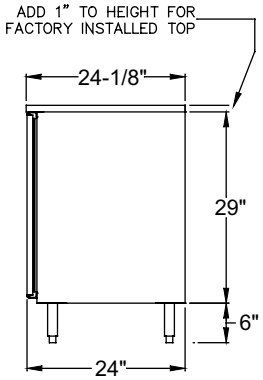

Side
Elevation

*NOTE: F1FL units are manufactured to order and are not returnable.

Frosters - One Zone, Front Serviced, Low Profile

Model	List	Length	Doors	Door Opening	Weight	Amps	HP	10 Oz. Mugs	6" High PintGlasses
F1FL32	$8,047	32"	1	16" W	240#	6.5	1/3	90	72
F1FL36	$8,137	36"	1	20" W	250#	6.5	1/3	126	90

Base price only. See next page for configurable options.

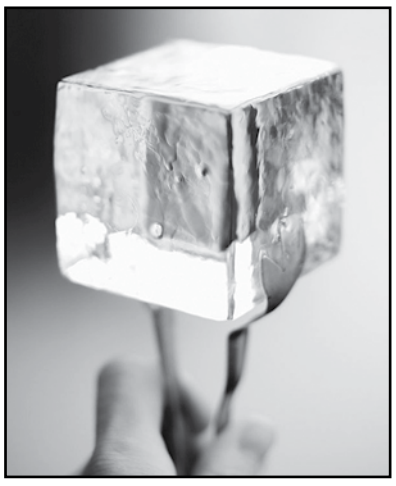

Capable of
storing specialty
cocktail ice

Glastender
Glastender, Inc. • 5400 North Michigan Road • Saginaw, MI • 48604-9780
800.748.0423 • 989.752.4275 • Fax 989.752.4444 • www.glastender.com

*NOTE: F1FL units are manufactured to order and are not returnable.

Select Configurable Options:

Voltage	
120V/60HZ	No charge
220V/50HZ (export voltage)	$322

Refrigeration Compartment Location	
Left	No charge
Right	No charge

Refrigeration Compartment Cover Finish	
Black vinyl-clad	No charge
Unlaminated	No charge
Stainless steel	No charge
Jeweled stainless steel	$244
Laminated	$284

Door Options

Style and Finish	
Door - Black vinyl-clad	No charge
Door - Unlaminated	No charge
Door - Stainless steel	No charge
Door - Jeweled stainless	$265
Door - Laminated	$302
Door - Glass, black vinyl-clad	$793
Door - Glass, stainless steel	$793
Door - Glass, jeweled stainless	$1,058
Door - Glass, laminated	$1,095
Door Hinge Location	
Left	No charge
Right	No charge
Door Handle	
Signature handle	No charge
Pull-tab handle - stainless or black to match door; black for laminate	No charge
Tube handle	No charge

Top Style	32″	36″
No finished top	No charge	
Stainless top	$518	$545
Drainboard top	$860	$912

4″ High Stainless Splashes	32″	36″
NOTE: Can only be ordered with stainless steel top		
Backsplash	$183	$195
Left side splash	$169	$169
Right side splash	$169	$169

Left Side Finish	
Black vinyl-clad	No charge
Stainless Steel	No charge

Right Side Finish	
Black vinyl-clad	No charge
Stainless Steel	No charge

Back Finish	32″	36″
Galvanized steel	No charge	
Stainless steel*	$267	$289

*NOTE: Stainless steel back option also includes stainless steel sides.

LED Lighting Style	
Bright white (7,000k), standard	No charge
Warm white (3,500k)	No charge
Amber (2,700k)	No charge
Blue	No charge

Leg and Stainless Steel Kick Rails

NOTE: Legs are required if kick rails are ordered.

	32″	36″
6″ legs	$265	$265
Front kick rail	$144	$149
Left side kick rail	$133	$133
Right side kick rail	$133	$133

Casters	32″	36″
4-1/8″ casters	$234	$234
2-7/8″ casters	$231	$231
1-1/2″ casters	$406	$406

Tube handle



Signature handle



Pull-tab handle





Product Information

(see F1SB Spec Sheet for complete details)

Standard Features:

- Self-contained
- All stainless steel interior construction
- Models with doors include three adjustable coated shelves per door
- Listed to NSF Standard 7

F1SB48 with compressor left, stainless steel doors and top

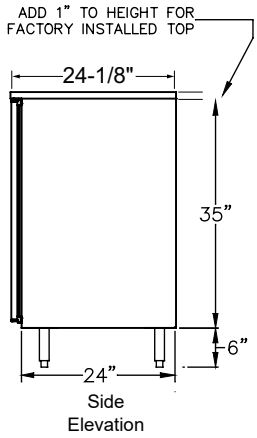

*NOTE: F1SB28, F1SB36, and F1SB44 freezers and all units with drawers are manufactured to order and are not returnable.

Freezers - One Zone, Side Serviced, Bar Profile

Model	List	Length	Doors	Door Opening	Weight	Amps	HP	6" High Pint Glasses
F1SB24	$7,713	24"	1	16" W	200#	6.5	1/3	89
F1SB28*	$8,075	28"	1	20" W	220#	6.5	1/3	106
F1SB36*	$10,562	36"	2	12" W	255#	6.5	1/3	158
F1SB44*	$11,107	44"	2	16" W	280#	6.5	1/3	202
F1SB48	$11,386	48"	2	18" W	300#	6.5	1/3	238

Base price only. See below for configurable options.

Accessories

Model	Description	List
DIP-16	Drawer insert for fractional stainless pans, 16" door opening (pans not included)	$271
DIP-18	Drawer insert for fractional stainless pans, 18" door opening (pans not included)	$277
DIP-20	Drawer insert for fractional stainless pans, 20" door opening (pans not included)	$301



DIP-18
Pans not included

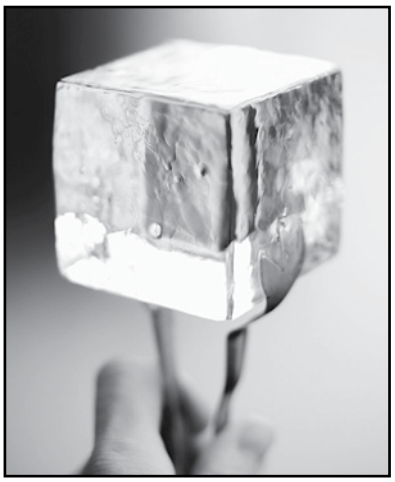

Capable of storing specialty cocktail ice

Glastender, Inc. • 5400 North Michigan Road • Saginaw, MI • 48604-9780
800.748.0423 • 989.752.4275 • Fax 989.752.4444 • www.glastender.com

*NOTE: F1SB28, F1SB36, and F1SB44 freezers and all units with drawers are manufactured to order and are not returnable.

Select Configurable Options:

Voltage

120V/60HZ	No charge
220V/50HZ (export voltage)	$322

Refrigeration Compartment Location

Left	No charge
Right	No charge

Refrigeration Compartment Cover Finish

Black vinyl-clad	No charge
Stainless steel	No charge
Jeweled stainless steel	$244

Door/Drawer Options

NOTE: Select options for EACH Door/Drawer Section

Style and Finish - Per Section

Door - Black vinyl-clad	No charge
Door - Unlaminated	No charge
Door - Stainless steel	No charge
Door - Jeweled stainless	$265
Door - Laminated	$302
Door - Glass, black vinyl-clad	$793
Door - Glass, stainless steel	$793
Door - Glass, jeweled stainless	$1,058
Door - Glass, laminated	$1,095
Drawers* - Black vinyl-clad	$2,571
Drawers* - Unlaminated	$2,571
Drawers* - Stainless steel	$2,571
Drawers* - Jeweled stainless	$2,836
Drawers* - Laminated	$2,873

*NOTE: Units with drawers are manufactured to order and are not returnable.

Door Hinge Location - Per Door

Left	No charge
Right	No charge

Door Handle - Per Door/Drawer

Signature handle (doors only)	No charge
Pull-tab handle - stainless or black to match door; black for laminate	No charge
Tube handle	No charge

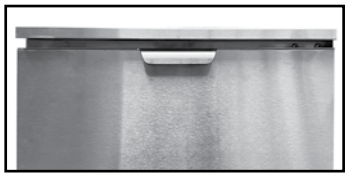

Drawer pull-tab handle

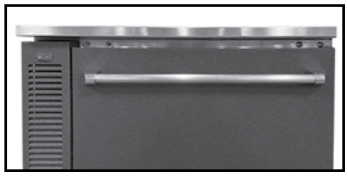

Drawer tube handle

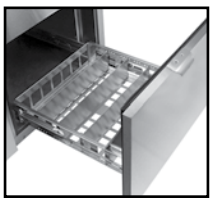

Optional drawers include adjustable divider walls

Top Style

	24″	28″	36″	44″	48″
No finished top	No charge				
Stainless top	$462	$488	$545	$604	$631

Left Side Finish

Black vinyl-clad	No charge
Stainless Steel	No charge

Right Side Finish

Black vinyl-clad	No charge
Stainless Steel	No charge

Back Finish

	24″	28″	36″	44″	48″
Galvanized steel	No charge				
Stainless steel*	$223	$245	$289	$333	$355

*NOTE: Stainless steel back option also includes stainless steel sides.

LED Lighting Style

Bright white (7,000k), standard	No charge
Warm white (3,500k)	No charge
Amber (2,700k)	No charge
Blue	No charge

Leg and Stainless Steel Kick Rails

NOTE: Legs are required if kick rails are ordered.

	24″	28″	36″	44″	48″
6″ legs	$212	$212	$212	$212	$212
Front kick rail	$133	$140	$149	$161	$166
Left side kick rail	$133	$133	$133	$133	$133
Right side kick rail	$133	$133	$133	$133	$133

Casters

	24″	28″	36″	44″	48″
4-1/8″ casters	$191	$191	$191	$191	$191
2-7/8″ casters	$185	$185	$185	$185	$185
1-1/2″ casters	$326	$326	$326	$326	$326



Signature handle



Pull-tab handle



Tube handle



F1SL24 with compressor left, stainless door and top

Product Information

(see F1SL Spec Sheet for complete details)

Standard Features:

- Self-contained
- All stainless steel interior construction
- Models with doors include three adjustable coated shelves per door
- Listed to NSF Standard 7

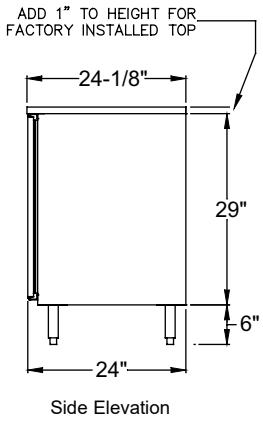

Side Elevation

*NOTE: F1SL units are manufactured to order and are not returnable.

Freezers - One Zone, Side Serviced, Low Profile*

Model	List	Length	Doors	Door Opening	Weight	Amps	HP	6" High Pint Glasses
F1SL24	$7,656	24"	1	16" W	180#	6.5	1/3	64
F1SL28	$7,899	28"	1	20" W	195#	6.5	1/3	76
F1SL36	$10,163	36"	2	12" W	230#	6.5	1/3	115
F1SL44	$10,648	44"	2	16" W	255#	6.5	1/3	148
F1SL48	$10,900	48"	2	18" W	280#	6.5	1/3	175

Base price only. See below for configurable options.

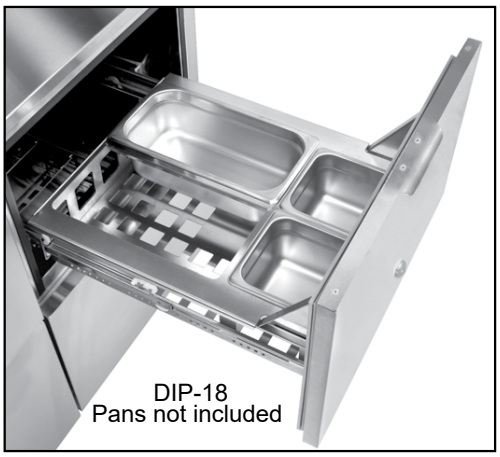

DIP-18
Pans not included

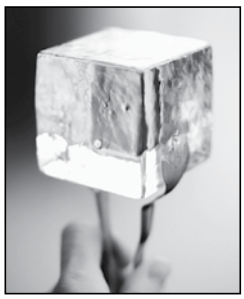

Capable of storing specialty cocktail ice

Accessories

Model	Description	List
DIP-16	Lower drawer insert for fractional stainless pans, 16" door opening (pans not included)	$271
DIP-16S	Shallow upper drawer insert for fractional stainless pans, 16" door opening (pans not included)	$271
DIP-18	Lower drawer insert for fractional stainless pans, 18" door opening (pans not included)	$277
DIP-18S	Shallow upper drawer insert for fractional stainless pans, 18" door opening (pans not included)	$277
DIP-20	Lower drawer insert for fractional stainless pans, 20" door opening (pans not included)	$301
DIP-20S	Shallow upper drawer insert for fractional stainless pans, 20" door opening (pans not included)	$301

Glastender, Inc. • 5400 North Michigan Road • Saginaw, MI • 48604-9780
800.748.0423 • 989.752.4275 • Fax 989.752.4444 • www.glastender.com

Freezers - One Zone, Side Serviced, Low Profile*

*NOTE: F1SL units are manufactured to order and are not returnable.

Select Configurable Options:

Voltage

120V/60HZ	No charge
220V/50HZ (export voltage)	$322

Refrigeration Compartment Location

Left	No charge
Right	No charge

RefrigerationCompartmentCoverFinish

Black vinyl-clad	No charge
Stainless steel	No charge
Jeweled stainless steel	$244

Door/Drawer Options

NOTE: Select options for EACH Door/Drawer Section

Style and Finish - Per Section

Door - Black vinyl-clad	No charge
Door - Unlaminated	No charge
Door - Stainless steel	No charge
Door - Jeweled stainless	$265
Door - Laminated	$302
Door - Glass, black vinyl-clad	$793
Door - Glass, stainless steel	$793
Door - Glass, jeweled stainless	$1,058
Door - Glass, laminated	$1,095
Drawers - Black vinyl-clad	$2,571
Drawers - Unlaminated	$2,571
Drawers - Stainless steel	$2,571
Drawers - Jeweled stainless	$2,836
Drawers - Laminated	$2,873

Door Hinge Location - Per Door

Left	No charge
Right	No charge

Door Handle - Per Door/Drawer

Signature handle (doors only)	No charge
Pull-tab handle - stainless or black to match door; black for laminate	No charge
Tube handle	No charge

Top Style

	24″	28″	36″	44″	48″
No finished top	No charge				
Stainless top	$462	$488	$545	$604	$631
Drainboard top	$761	$811	$912	$1,010	$1,062

4″ High Stainless Splashes

	24″	28″	36″	44″	48″
NOTE: Can only be ordered with stainless steel top					
Backsplash	$169	$179	$195	$210	$216
Left side splash	$169	$169	$169	$169	$169
Right side splash	$169	$169	$169	$169	$169

Left Side Finish

Black vinyl-clad	No charge
Stainless Steel	No charge

Right Side Finish

Black vinyl-clad	No charge
Stainless Steel	No charge

Back Finish

	24″	28″	36″	44″	48″
Galvanized steel	No charge				
Stainless steel*	$223	$245	$289	$333	$355

*NOTE: Stainless steel back option also includes stainless steel sides.

LED Lighting Style

Bright white (7,000k), standard	No charge
Warm white (3,500k)	No charge
Amber (2,700k)	No charge
Blue	No charge

Leg and Stainless Steel Kick Rails

NOTE: Legs are required if kick rails are ordered.

	24″	28″	36″	44″	48″
6″ legs	$212	$212	$212	$212	$212
Front kick rail	$133	$140	$149	$161	$166
Left side kick rail	$133	$133	$133	$133	$133
Right side kick rail	$133	$133	$133	$133	$133

Casters

	24″	28″	36″	44″	48″
4-1/8″ casters	$191	$191	$191	$191	$191
2-7/8″ casters	$185	$185	$185	$185	$185
1-1/2″ casters	$326	$326	$326	$326	$326

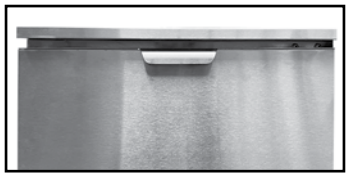

Drawer pull-tab handle

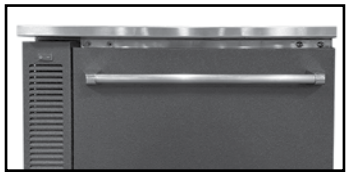

Drawer tube handle

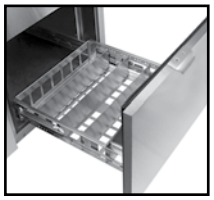

Optional drawers include adjustable divider walls



Signature handle



Pull tab handle



Tube handle

Bar Refrigeration

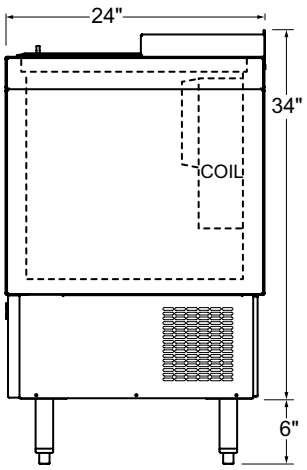

ST24
Side Elevation

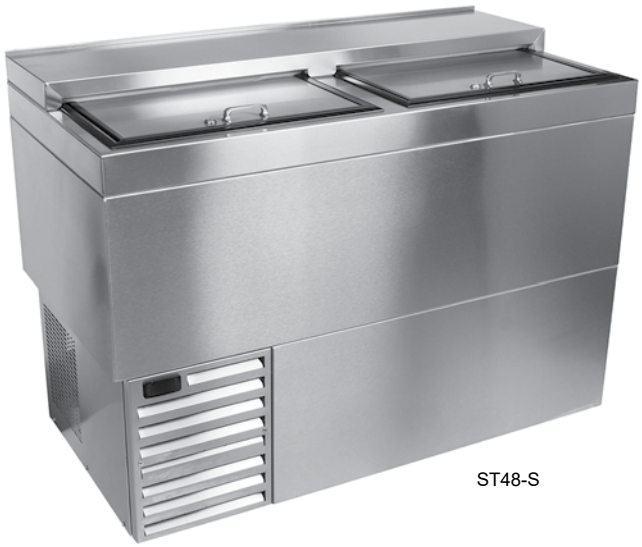

ST48-S

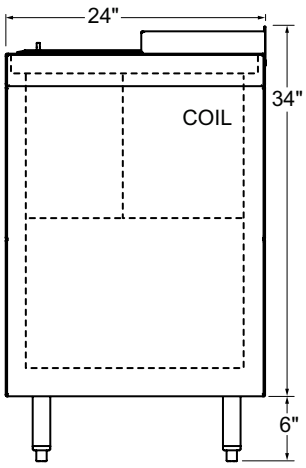

ST36, ST48, ST60, ST72, ST96
Side Elevation

Slide Top Coolers

Black Vinyl-Clad Exterior		Stainless Steel Exterior					
Model	List	Model	List	Length	Divider Racks	Case Cap. Bottles	Wgt
ST24-B	$5,854	ST24-S	$6,143	24″	1	6.0	180#
ST36-B	$6,759	ST36-S	$7,070	36″	2	9.4	230#
ST48-B	$8,618	ST48-S	$8,946	48″	3	13.8	270#
ST60-B	$9,810	ST60-S	$10,155	60″	3	19.9	320#
ST72-B	$11,087	ST72-S	$11,459	72″	4	25.4	350#
ST96-B*	$13,350	ST96-S*	$13,758	96″	5	34.4	450#

*NOTE: These model Slide Top Coolers are manufactured to order and are not returnable

Product Information (see ST Spec Sheet for complete details)

Standard Features:
- Self-contained refrigeration
- All stainless steel interior with radius corners is easy to keep clean
- Easy to plan exterior dimensions: 24″ front to back and 24″, 36″, 48″, 60″, 72″, or 96″ left to right
- Foamed-in-place insulation
- Six-foot grounded cord and plug provided (exits at rear)
- Automatic defrost timer
- Door lock(s)

Electrical:
- Dedicated 15 amp circuit is required
- 120V, 1 phase, 60 Hz, 4.5 full load amps
- Includes 9-foot grounded cord

Refrigeration:
- 1/6 HP, R290 refrigerant

Plumbing:
Automatic condensate evaporator. No drain connection required.

Accessories

Model	Description	List	Wt
C-4X4-1/8	4-1/8″H caster, set of four (ST24, ST36, ST48, ST60)	$191	4#
C-6X4-1/8	4-1/8″H caster, set of six (ST72, ST96)	$289	6#
C-4X2-7/8	2-7/8″H caster, set of four (ST24, ST36, ST48, ST60)	$185	4#
C-6X2-7/8	2-1/2″H caster, set of six (ST72, ST96)	$277	8#
C-4X1	1-1/2″H caster, set of four (ST24, ST36, ST48, ST60)	$326	2#
C-6X1	1-1/2″H caster, set of six (ST72, ST96)	$487	2#
LEG06X4	Legs (set of 4), 6″ (ST24, ST36, 48, 60)	$212	5#
LEG06X6	Legs (set of 6), 6″ (ST72, 96)	$318	7#
BO/CC	Bottle opener/cap catcher	$107	5#
STKR-24	24″ kick rail	$133	2#
STKR-36	36″ kick rail	$149	3#
STKR-48	48″ kick rail	$166	4#
STKR-60	60″ kick rail	$182	5#
STKR-72	72″ kick rail	$200	6#
STKR-96	96″ kick rail	$231	9#
STBS-24	24″ slide top backsplash	$169	4#
STBS-36	36″ slide top backsplash	$195	6#
STBS-48	48″ slide top backsplash	$216	8#
STBS-60	60″ slide top backsplash	$243	10#
STBS-72	72″ slide top backsplash	$270	12#
STBS-96	96″ slide top backsplash	$319	16#
08000512	Chrome divider rack (extra) for ST36, 48, 60, 72, and 96	$103	4#
08000519	Stainless steel divider wall (extra) for ST24	$141	5#
CE-220/50S	Convert self-contained unit to 220V/50Hz electrical	$322	N/A

Glastender

Glastender, Inc. • 5400 North Michigan Road • Saginaw, MI • 48604-9780
800.748.0423 • 989.752.4275 • Fax 989.752.4444 • www.glastender.com

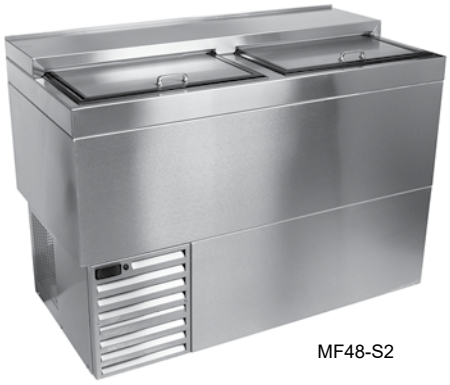

MF48-S2

NOTE: Units come standard with bottom rack, which is recommended for chilling stacked plates. Two additional layers of shelves are optional, which is recommended for chilling glassware.

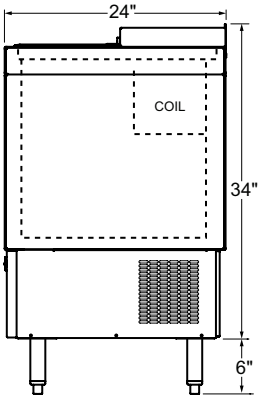

MF24
Side Elevation

24″ Models

Black Vinyl-Clad Exterior		Stainless Steel Exterior		Number of	
Model	List	Model	List	Shelves	Wgt
MF24-B	$6,909	MF24-S	$7,198	0	195#
MF24-B2	$7,109	MF24-S2	$7,396	2	205#

36″ Models

Black Vinyl-Clad Exterior		Stainless Steel Exterior		Number of	
Model	List	Model	List	Shelves	Wgt
MF36-B	$7,757	MF36-S	$8,065	0	235#
MF36-B2	$8,063	MF36-S2	$8,372	2	255#

48″ Models

Black Vinyl-Clad Exterior		Stainless Steel Exterior		Number of	
Model	List	Model	List	Shelves	Wgt
MF48-B	$8,751	MF48-S	$9,081	0	280#
MF48-B2	$9,170	MF48-S2	$9,498	2	300#

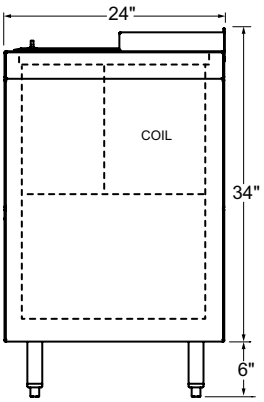

MF36, MF48
Side Elevation

Accessories

Model	Description	List	Wt
C-4X4-1/8	4-1/8″H caster, set of four	$191	4#
C-4X2-7/8	2-7/8″H caster, set of four	$185	4#
C-4X1	1-1/2″H caster, set of four	$326	2#
LEG06X4	Legs (set of 4), 6″ (MF36, 48)	$212	5#
MFKR-24	24″ kick rail	$133	2#
MFKR-36	36″ kick rail	$149	3#
MFKR-48	48″ kick rail	$166	4#
SSR-24	24″ single speed rail	$331	7#
SSR-36	36″ single speed rail	$384	12#
SSR-48	48″ single speed rail	$441	22#
MFBS-24	24″ backsplash	$169	4#
MFBS-36	36″ backsplash	$195	6#
MFBS-48	48″ backsplash	$216	8#
CE-220/50S	Convert self-contained unit to 220V/50Hz electrical	$322	N/A

Product Information

(see MF Spec Sheet for complete details)

Standard Features: All stainless steel interior construction • Units come standard with bottom rack, which is recommended for chilling stacked plates. Two additional layers of shelves are optional, which is recommended for chilling glassware. • Two Defrost Cycles: *Automatic* - occurs every eight hours without affecting normal operation, *Manual* - user initiated button for complete six-hour defrost with automatic restart

Electrical: 120V, 1 phase, 60 Hz, 6.0 full load amps. Includes 9-foot grounded cord.

Refrigeration: 1/3 HP, R290 refrigerant, operating range: 12ºF to 35ºF

Plumbing: No drain connection required

Capacity: Pint glasses - 24″ Model = 55♦, 36″ Model = 87♦, 48″ Model = 147♦

♦ Based on models with two additional layers of shelves and filled with 3-1/2″ diameter by 5-7/8″ high pint glasses

12″ Deep Glass Ice Display Units

Model	List	Weight	Length
GDU-12X24	$2,501	60#	24″
GDU-12X30	$2,618	65#	30″
GDU-12X36	$2,731	70#	36″
GDU-12X42	$2,849	75#	42″
GDU-12X48	$2,961	80#	48″
GDU-12X54	$3,077	85#	54″
GDU-12X60	$4,221	90#	60″
GDU-12X66	$4,376	95#	66″
GDU-12X72	$4,538	100#	72″
GDU-12X78	$4,694	105#	78″
GDU-12X84	$4,854	110#	84″
GDU-12X90	$5,011	115#	90″
GDU-12X96	$5,169	120#	96″
GDU-12X102	$5,328	125#	102″
GDU-12X108	$5,485	130#	108″

16″ Deep Glass Ice Display Units

Model	List	Weight	Length
GDU-16X24	$2,770	70#	24″
GDU-16X30	$2,886	75#	30″
GDU-16X36	$3,003	80#	36″
GDU-16X42	$3,117	85#	42″
GDU-16X48	$3,234	90#	48″
GDU-16X54	$3,350	95#	54″
GDU-16X60	$4,490	100#	60″
GDU-16X66	$4,650	105#	66″
GDU-16X72	$4,806	110#	72″
GDU-16X78	$4,965	115#	78″
GDU-16X84	$5,121	120#	84″
GDU-16X90	$5,278	125#	90″
GDU-16X96	$5,437	130#	96″
GDU-16X102	$5,595	135#	102″
GDU-16X108	$5,753	140#	108″

18″ Deep Glass Ice Display Units

Model	List	Weight	Length
GDU-18X24	$2,770	70#	24″
GDU-18X30	$2,886	75#	30″
GDU-18X36	$3,003	80#	36″
GDU-18X42	$3,117	85#	42″
GDU-18X48	$3,234	90#	48″
GDU-18X54	$3,350	95#	54″
GDU-18X60	$4,490	100#	60″
GDU-18X66	$4,650	105#	66″
GDU-18X72	$4,806	110#	72″
GDU-18X78	$4,965	115#	78″
GDU-18X84	$5,121	120#	84″
GDU-18X90	$5,278	125#	90″
GDU-18X96	$5,437	130#	96″
GDU-18X102	$5,595	135#	102″
GDU-18X108	$5,753	140#	108″

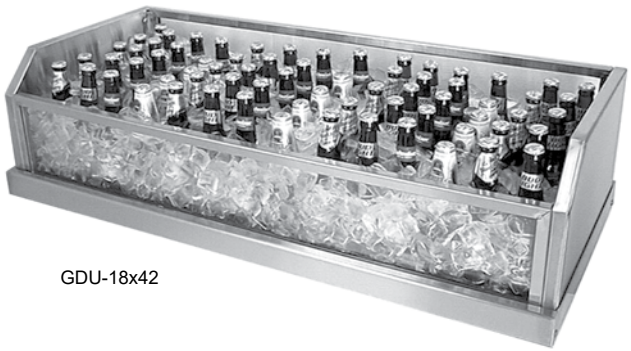

GDU-18x42

See page 128 for LLD model Lighted Liquor Displays that are specifically designed for use with Glastender Glass Ice Display Units.

24″ Deep Glass Ice Display Units

Model	List	Weight	Length
GDU-24X24	$3,039	75#	24″
GDU-24X30	$3,155	80#	30″
GDU-24X36	$3,271	85#	36″
GDU-24X42	$3,387	90#	42″
GDU-24X48	$3,501	95#	48″
GDU-24X54	$3,618	100#	54″
GDU-24X60	$4,752	110#	60″
GDU-24X66	$4,911	115#	66″
GDU-24X72	$5,069	120#	72″
GDU-24X78	$5,228	125#	78″
GDU-24X84	$5,384	130#	84″
GDU-24X90	$5,544	135#	90″
GDU-24X96	$5,702	140#	96″
GDU-24X102	$5,859	145#	102″
GDU-24X108	$6,019	150#	108″

Product Information

(see GDU Spec Sheet for complete details)

Standard Features

- Stainless steel foamed-in-place insulated end panels (units larger than 54″ include center partition)
- Stainless steel insulated drain pan to mount to existing counter top
- Double pane glass front and back panels with stainless steel trim
- Stainless steel perforated bottom inserts (1/2″ tall)

NOTE: Glass Ice Display Units include a special insulated stainless drain pan that mounts to a countertop.

*NOTE: Glass Ice Display Units are manufactured to order and are not returnable

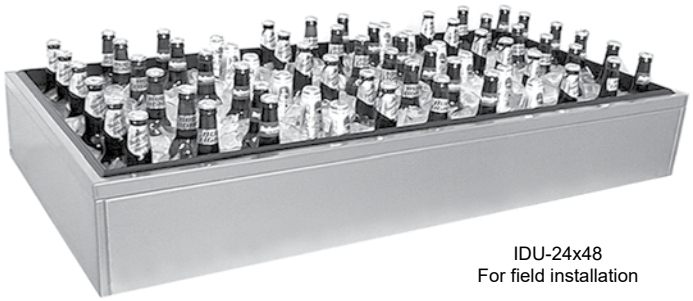

IDU-24x48
For field installation

Standard Features

- All stainless steel construction
- PVC "Breaker Strip" around ice bins acts as thermal barrier to prevent heat transfer
- Foamed-in-place insulation
- Stainless steel front, back, and sides are standard; black vinyl-clad is optional
- 1/2″ tall perforated stainless steel bottom inserts
- Available as factory installed on top of a cooler cabinet or as field installed on a countertop
- 7″ high with 6″ deep liner

Product Information

(see IDU Spec Sheet for complete details)

Ice display units merchandise bottled beverages and may be factory mounted to the top of most Glastender coolers.

Ice display unit may also be field installed to an existing countertop. A $500 list deduct applies to field installed units.

12″ Deep Ice Display Units

Model	List	Weight	Length
IDU-12X24	$2,225	35#	24″
IDU-12X30	$2,378	40#	30″
IDU-12X36	$2,539	45#	36″
IDU-12X42	$2,695	50#	42″
IDU-12X48	$2,849	55#	48″
IDU-12X54	$3,008	60#	54″
IDU-12X60	$3,163	65#	60″

18″ Deep Ice Display Units

Model	List	Weight	Length
IDU-18X24	$2,513	45#	24″
IDU-18X30	$2,733	50#	30″
IDU-18X36	$2,954	58#	36″
IDU-18X42	$3,174	66#	42″
IDU-18X48	$3,395	74#	48″
IDU-18X54	$3,615	82#	54″
IDU-18X60	$3,834	90#	60″

24″ Deep Ice Display Units

Model	List	Weight	Length
IDU-24X24	$2,776	55#	24″
IDU-24X30	$3,065	65#	30″
IDU-24X36	$3,358	75#	36″
IDU-24X42	$3,649	85#	42″
IDU-24X48	$3,938	95#	48″
IDU-24X54	$4,230	105#	54″
IDU-24X60	$4,520	115#	60″

*NOTE: Ice Display Units are manufactured to order and are not returnable

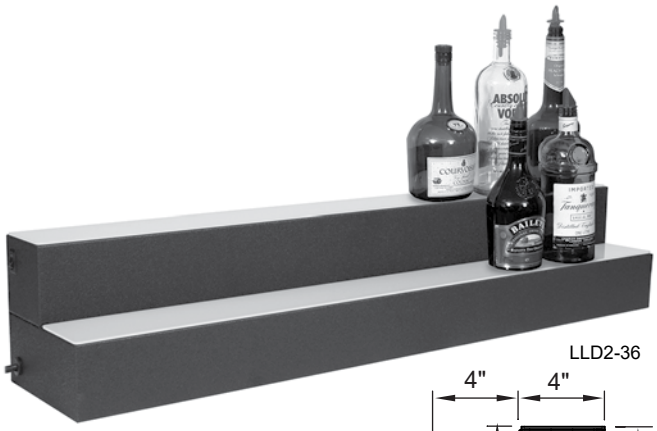

LLD2-36

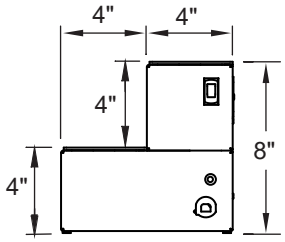

SIDE VIEW - LLD2
(if power cord right)

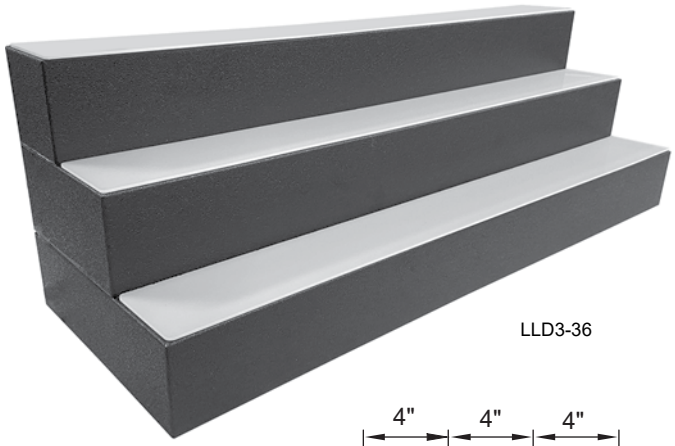

LLD3-36

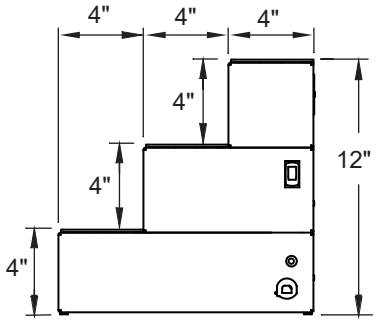

SIDE VIEW - LLD3
(if power cord right)

Two Tier Lighted Liquor Displays

Model	List	Length	Weight
LLD2-24	$1,121	24″	25#
LLD2-30	$1,251	30″	29#
LLD2-36	$1,368	36″	33#
LLD2-42	$1,486	42″	37#
LLD2-48	$1,613	48″	41#
LLD2-54	$1,764	54″	45#
LLD2-60	$1,882	60″	58#

Base price only. See below for configurable options.

Three Tier Lighted Liquor Displays

Model	List	Length	Weight
LLD3-24	$1,571	24″	30#
LLD3-30	$1,768	30″	35#
LLD3-36	$1,945	36″	40#
LLD3-42	$2,121	42″	44#
LLD3-48	$2,308	48″	49#
LLD3-54	$2,541	54″	54#
LLD3-60	$2,716	60″	70#

Base price only. See below for configurable options.

Product Information

(see LLD Spec Sheet for complete details)

Standard Features: Provides illuminated, stepped liquor bottle storage and display • Black vinyl-clad or stainless steel exterior • On/off switch and 6-foot grounded cord and plug • Includes LED light strips • LED lighting style available as bright white, warm white, or adjustable multi-color • Opaque acrylic step cover

Electrical: 100-240 VAC, 1 phase, 50/60Hz, less than 2 full load amps • Includes on/off switch and 6-foot grounded cord and plug

*NOTE: Lighted Liquor Displays are manufactured to order and are not returnable

Select Configurable Options:

Power Cord Style	
Type B - NEMA 5-15P (Default - North America)	No charge
Type F (Europe)	No charge
Type M (India)	No charge

Power Cord Location	
Left	No charge
Right	No charge

Exterior Finish	
Black vinyl-clad	No charge
Stainless steel	$66

LED Lighting	
Bright white	No charge
Warm white	No charge
Adjustable multi-color	$247

Glastender

Glastender, Inc. • 5400 North Michigan Road • Saginaw, MI • 48604-9780
800.748.0423 • 989.752.4275 • Fax 989.752.4444 • www.glastender.com

Glass Ice Display Unit Lighted Liquor Displays*



LLDG-48 shown installed with a GDU-16x48 factory mounted on cooler cabinet



LLDG-36

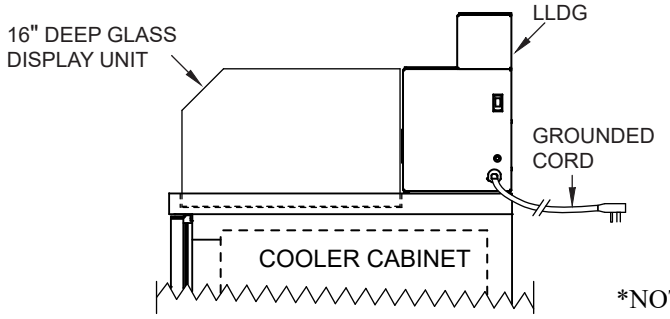

SIDE VIEW OF LLDG
(with factory installed 16" deep glass ice display unit)

LLDG model Lighted Liquor Displays are specifically designed for use with Glastender Glass Ice Display Units (see page 125). When mounted on a cooler at the factory, the 16″ deep GDU models have an 8-1/4″ rear deck space designed to fit the 8″ deep LLDG. The 9-1/4″ high first step of the LLDG raises the bottles above the back of the GDU. Also, the LLDG has a front light channel to help illuminate the GDU. (See the side view detail.)

Glass Ice Display Unit Lighted Liquor Displays

Model	List	Length	Weight
LLDG-24	$1,657	24″	25#
LLDG-30	$1,849	30″	29#
LLDG-36	$2,019	36″	33#
LLDG-42	$2,189	42″	37#
LLDG-48	$2,372	48″	41#
LLDG-54	$2,600	54″	45#
LLDG-60	$2,770	60″	58#

Base price only. See below for configurable options.

Product Information

(see LLD Spec Sheet for complete details)

Standard Features: Provides illuminated, stepped liquor bottle storage and display • Black vinyl-clad or stainless steel exterior • On/off switch and 6-foot grounded cord and plug • Includes LED light strips • LED lighting style available as bright white, warm white, or adjustable multi-color • Opaque acrylic step cover • 9-1/4″ high first step and a front light channel for use in conjunction with Glastender Glass Ice Display Units

Electrical: 100-240 VAC, 1 phase, 50/60Hz, less than 2 full load amps • Includes on/off switch and 6-foot grounded cord and plug

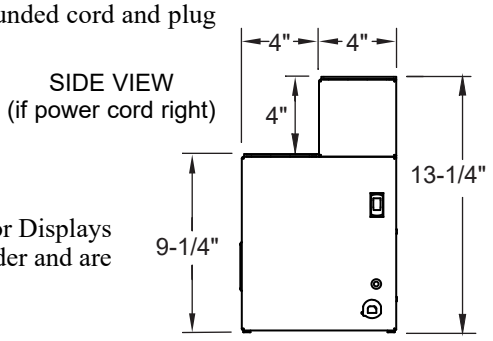

*NOTE: Lighted Liquor Displays are manufactured to order and are not returnable

Select Configurable Options:

Power Cord Style	
Type B - NEMA 5-15P (Default - North America)	No charge
Type F (Europe)	No charge
Type M (India)	No charge

Power Cord Location	
Left	No charge
Right	No charge

Exterior Finish	
Black vinyl-clad	No charge
Stainless steel	$66

LED Lighting	
Bright white	No charge
Warm white	No charge
Adjustable multi-color	$247

Product Information

(see LPDS Spec Sheet for complete details)

Standard Features: Galvanized steel interior construction • Foamed-in-place insulation for extra sturdiness • Black vinyl-clad steel exterior front and sides • Stainless steel die cast handle with lock • Leg sockets recessed into base • 180° swinging door



LPDS24-1SS(L)

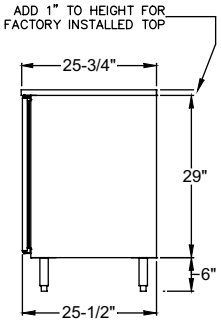

Side Elevation

Low Profile Dry Storage Cabinets

Model	List	Length	Doors	Weight
LPDS24	$2,308	24″	1	135#
LPDS40	$4,356	40″	2	245#
LPDS48	$4,608	48″	2	255#
LPDS60	$5,983	60″	3	350#
LPDS72	$6,433	72″	3	365#
LPDS80	$7,645	80″	4	455#
LPDS96	$8,253	96″	4	475#

Base price only. See below for configurable options.

*NOTE: Low Profile Dry Storage Cabinets are manufactured to order and are not returnable.

Select Configurable Options:

Door Options

NOTE: Select options for EACH Door Section

Style and Finish - Per Door	
Door - Black vinyl-clad	No charge
Door - Unlaminated	No charge
Door - Stainless steel	No charge
Door - Jeweled stainless	$265
Door - Laminated	$302
Door Hinge Location - Per Door	
Left	No charge
Right	No charge
Shelving	
Two adjustable shelves per door included	No charge
Door Handle - Per Door	
Signature handle	No charge
Pull-tab handle - stainless or black to match door; black for laminate	No charge
Tube handle	No charge



Signature handle



Pull tab handle



Tube handle

Top Style

	24″	40″	48″	60″	72″	80″	96″
No finished top	No charge						
Stainless top	$526	$573	$631	$717	$802	$860	$974

Left Side Finish

Black vinyl-clad	No charge
Stainless Steel	No charge

Right Side Finish

Black vinyl-clad	No charge
Stainless Steel	No charge

Leg and Stainless Steel Kick Rails

NOTE: Legs are required if kick rails are ordered.

	24″	40″	48″	60″	72″	80″	96″
6″ legs	$212	$212	$212	$318	$318	$318	$318
Front kick rail	$133	$152	$166	$182	$200	$209	$231
Left side kick rail	$133	$133	$133	$133	$127	$133	$133
Right side kick rail	$133	$133	$133	$133	$127	$133	$133

Casters

	24″	40″	48″	60″	72″	80″	96″
4-1/8″ casters	$191	$191	$191	$289	$289	$289	$289
2-7/8″ casters	$185	$185	$185	$277	$277	$277	$277
1-1/2″ casters	$326	$326	$326	$487	$487	$487	$487



DS24 with stainless door and top

*NOTE: Dry Storage Cabinets are manufactured to order and are not returnable.

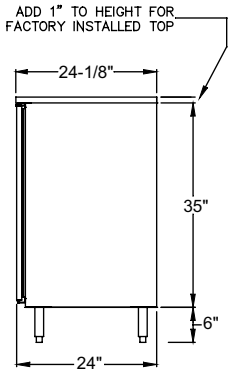

Side Elevation

Product Information

(see Dry Storage Spec Sheet for complete details)

Standard Features:

- Galvanized steel interior construction
- Galvanized steel back

Dry Storage Cabinets

Model	List	Length	Doors	Weight
DS24	$2,537	24″	1	140#
DS40	$4,572	40″	2	255#
DS48	$4,842	48″	2	265#
DS60	$6,273	60″	3	365#
DS72	$6,740	72″	3	380#
DS80	$8,081	80″	4	475#
DS96	$8,712	96″	4	495#

Base price only. See below for configurable options.

Select Configurable Options:

Door Options

NOTE: Select options for EACH Door Section

Style and Finish - Per Door	
Door - Black vinyl-clad	No charge
Door - Unlaminated	No charge
Door - Stainless steel	No charge
Door - Jeweled stainless	$265
Door - Laminated	$302
Door Hinge Location - Per Door	
Left	No charge
Right	No charge
Shelving	
Two adjustable shelves per door included	No charge
Door Handle - Per Door	
Signature handle	No charge
Pull-tab handle - stainless or black to match door; black for laminate	No charge
Tube handle	No charge



Signature handle



Pull tab handle



Tube handle

Top Style

	24″	40″	48″	60″	72″	80″	96″
No finished top	No charge						
Stainless top	$526	$573	$631	$717	$802	$860	$974

Left Side Finish

Black vinyl-clad	No charge
Stainless Steel	No charge

Right Side Finish

Black vinyl-clad	No charge
Stainless Steel	No charge

Leg and Stainless Steel Kick Rails

NOTE: Legs are required if kick rails are ordered.

	24″	40″	48″	60″	72″	80″	96″
6″ legs	$212	$212	$212	$318	$318	$318	$318
Front kick rail	$133	$152	$166	$182	$200	$209	$231
Left side kick rail	$133	$133	$133	$133	$133	$133	$133
Right side kick rail	$133	$133	$133	$133	$133	$133	$133

Casters

	24″	40″	48″	60″	72″	80″	96″
4-1/8″ casters	$191	$191	$191	$289	$289	$289	$289
2-7/8″ casters	$185	$185	$185	$277	$277	$277	$277
1-1/2″ casters	$326	$326	$326	$487	$487	$487	$487

Product Information

(see BGS and BLD Spec Sheets for complete details)

*NOTE: These items are manufactured to order and are not returnable



BGS-24
shown with T-24X24-S



BLD-24
shown with T-24X24-S

24″ Deep Back Bar Glass Storage Units

Black	List	Stainless	List	Length	Wgt
BGS-18	$2,948	BGS-18-S	$3,048	18″	110#
BGS-24	$3,399	BGS-24-S	$3,500	24″	135#
BGS-30	$3,851	BGS-30-S	$3,951	30″	160#

24″ Deep Back Bar Liquor Displays

Black	List	Stainless	List	Length	Wgt
BLD-18	$2,763	BLD-18-S	$2,862	18″	95#
BLD-24	$3,043	BLD-24-S	$3,143	24″	105#
BLD-30	$3,325	BLD-30-S	$3,426	30″	120#
BLD-36	$3,605	BLD-36-S	$3,705	36″	130#
BLD-42	$3,887	BLD-42-S	$3,987	42″	145#
BLD-48	$4,170	BLD-48-S	$4,269	48″	155#

Locking Covers for Back Bar Liquor Displays

Stainless	List	Black	List	Length	Wgt
BLC-18-S	$470	BLC-18	$379	18″	18#
BLC-24-S	$529	BLC-24	$413	24″	20#
BLC-30-S	$587	BLC-30	$449	30″	25#
BLC-36-S	$647	BLC-36	$483	36″	30#
BLC-42-S	$705	BLC-42	$519	42″	35#
BLC-48-S	$765	BLC-48	$555	48″	40#

Stainless Tops

Stainless	List	Length	Wgt
T-24X18-S	$467	18″	15#
T-24X24-S	$526	24″	18#
T-24X30-S	$586	30″	21#
T-24X36-S	$645	36″	24#
T-24X42-S	$701	42″	27#
T-24X48-S	$761	48″	30#

Stainless Kick Rails

NOTE: Legs are required if kick rails are ordered.

Model	List	Length	Wgt
CKR-18	$125	18″	2#
CKR-24	$133	24″	4#
CKR-30	$141	30″	6#
CKR-36	$149	36″	8#
CKR-42	$153	42″	10#
CKR-48	$166	48″	12#

Legs and Casters

6″ Legs	$212
4-1/8″ Casters	$191
2-7/8″ Casters	$185
1-1/2″ Casters	$326

Margarita Machine Stands*

Pricing effective January 1, 2025

Margarita Machine Stands

Model	Length	List	Weight
MS20	20″	$2,497	110#
MS24	24″	$2,588	115#



MS20
Shown with
optional legs

*NOTE: Margarita Machine Stands are manufactured to order and are not returnable.

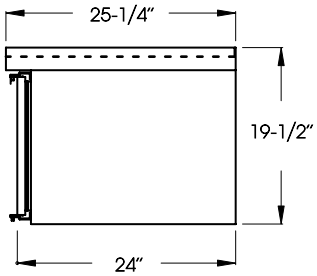

Side Elevation

Product Information

(see MS Spec Sheet for complete details)

Select Configurable Options:

Door	
Finish	
Black vinyl-clad	No charge
Stainless Steel	No charge
Hinge Location	
Left	No charge
Right	No charge
Side Finish	
Black vinyl-clad	No charge
Stainless Steel	No charge
Legs and Casters	
6″ Legs	$212
4-1/8″ Casters	$191
2-7/8″ Casters	$185
1-1/2″ Casters	$326

6″ Leg Sets

Model	Description	List	Wt
LEG06X4	Set of four legs, for front-serviced and remote coolers up to 2 doors - does not include 32″ and 36″ front-serviced coolers (see LEGS06X5)	$212	5#
LEG06X4-AT	Set of four legs, for side-serviced coolers and frosters	$212	6#
LEG06X5	Set of five legs, for 32″ and 36″ front- serviced coolers	$265	6#
LEG06X6	Set of six legs, for coolers with 3 or 4 doors	$318	7#

4″ Caster Sets

Model	Description	List	Wt
C-4X4-1/8	4-1/8″H caster, set of four, for 2-door front-serviced coolers	$191	4#
C-4X4-1/8-S	4-1/8″H caster, set of four, for side-serviced coolers and frosters	$191	4#
C-5X4-1/8-S	4-1/8″H caster, set of five, for 1-door front-serviced coolers and frosters	$234	5#
C-6X4-1/8	4-1/8″H caster, set of six, for coolers with 3 or 4 doors	$289	6#
C-6X4-1/8-S	4-1/8″H caster, set of six, for 72″ and 84″ shallow-depth coolers	$289	6#

2″ Caster Sets

Model	Description	List	Wt
C-4X2-7/8	2-7/8″H caster, set of four, for 2-door front-serviced cooler	$185	4#
C-4X2-7/8-S	2-7/8″H caster, set of four, for side-serviced coolers and frosters	$185	4#
C-5X2-7/8-S	2-7/8″H caster, set of five, for 1-door front-serviced coolers and frosters	$231	5#
C-6X2-7/8	2-7/8″H caster, set of six, for coolers with 3 or 4 doors	$277	6#
C-6X2-7/8-S	2-7/8″H caster, set of six, for 72″ and 84″ shallow-depth coolers	$277	6#

1-1/2″ Caster Sets

Model	Description	List	Wt
C-4X1	1-1/2″H caster, set of four	$326	2#
C-5X1	1-1/2″H caster, set of five, for 1-door front-serviced coolers and frosters	$406	2#
C-6X1	1-1/2″H caster, set of six, for coolers with 3 or 4 doors	$487	2#

Forced Air Crossover & Shaft Assemblies

Model	Description	List	Wt
CROSS-RR	30″ crossover tube assembly with 100 CFM blower motor from a refrigerator to another	$1,181	15#
CROSS-WR	30″ crossover tube assembly with 100 CFM blower motor from a walk-in cooler to a refrigerator	$1,288	20#
CROSS-WT	30″ crossover tube assembly with 100 CFM blower motor from a walk-in cooler to a wall mount tower	$1,297	20#
SHAFT-RT	72″ air shaft assembly with 100 CFM blower motor from a refrigerator to a beer tower	$1,471	25#
SHAFT-WT	72″ air shaft assembly with 100 CFM blower motor from a walk-in cooler to a beer tower	$1,507	28#

18" Condensing Unit Storage Cabinet*



CS18

18″ Condensing Unit Storage Cabinet*

Standard List = $1,959
Weight:
without top = 85#
with top = 105#

Product Information
(see CS18 Spec Sheet for complete details)

*NOTE: 18″Condensing Unit Storage Cabinets are manufactured to order and are not returnable

Select Configurable Options:

Front Finish	
Black vinyl-clad	No charge
Stainless Steel	No charge

Top Style	
No finished top	No charge
Stainless Steel	$467

Left and Right Side Finish	
Black vinyl-clad	No charge
Stainless Steel	No charge

Legs	
6″ Legs	$212

Product Information

(see BLC Spec Sheet for complete details)

- Enhanced cooling capacity allows longer line runs and more faucets per chiller
- 1/2" ID glycol connections with 100 GPH pump
- Durable stainless steel exterior with 16 gauge galvanized steel base
- Stainless steel, eco friendly, foamed-in-place insulated glycol bath
- Front located glycol filling port
- Digital temperature control with LCD display
- "-2" suffix in model number denotes two recirculating pumps, "-3" suffix in model number denotes three recirculating pumps

Model No.		BLC-1/3	BLC-1/3-2	BLC-1/2	BLC-1/2-2	BLC-3/4	BLC-3/4-2	BLC-3/4-3
Dimensions†	Length (inches)	28-7/8	28-7/8	28-7/8	28-7/8	28-7/8	28-7/8	28-7/8
	Width (inches)	28-5/8	28-5/8	28-5/8	28-5/8	28-5/8	28-5/8	28-5/8
	Height (inches)	24-1/8	24-1/8	24-1/8	24-1/8	24-1/8	24-1/8	24-1/8
Electrical	Voltage	120V	120V	120V	120V	208/240V	208/240V	208/240V
	Frequency	60 Hz	60 Hz	60 Hz	60 Hz	60 Hz	60 Hz	60 Hz
	Phase	1ø	1ø	1ø	1ø	1ø	1ø	1ø
	FLA	14A	20A	15A	21A	8.5A/9A	10.5A/11A	12.5A/13A
	Dedicated Circuit	20A	30A	20A	30A	20A	20A	20A
	Electrical Connection	Corded with NEMA 5-20P	Hard Wire	Corded with NEMA 5-20P	Hard Wire	Corded with NEMA 6-20P	Corded with NEMA 6-20P	Corded with NEMA 6-20P
Refrigerant		R448A	R448A	R448A	R448A	R448A	R448A	R448A
Refrigerant Charge		24 oz	24 oz	24 oz	24 oz	24 oz	24 oz	24 oz
Compressor		1/3 HP	1/3 HP	1/2 HP	1/2 HP	3/4 HP	3/4 HP	3/4 HP
Capacities*		3,400 BTUH	2,800 BTUH	4,600 BTUH	4,100 BTUH	6,200 BTUH	5,700 BTUH	5,000 BTUH
Heat Rejection (BTU/hr)		9,133 BTUH	10,990 BTUH	10,743 BTUH	12,700 BTUH	13,571 BTUH	14,709 BTUH	15,647 BTUH
Circulating Pumps		100 GPH	100 GPH	100 GPH	100 GPH	100 GPH	100 GPH	100 GPH
Glycol Bath Capacity		4 Gallons	4 Gallons	4 Gallons	4 Gallons	4 Gallons	4 Gallons	4 Gallons
Shipping Weight LBS (kg)		190 (86.2)	205 (93)	190 (86.2)	205 (93)	200 (90.7)	215 (97.5)	230 (104.3)

* Note: Rated capacities assume maximum operating ambient temperature of 80°F.

† Note: A minimum clearance of eight inches from the back and twenty-four inches from the left and right sides of the unit must be allowed for proper air flow. See diagram below.

Glastender

Glastender, Inc. • 5400 North Michigan Road • Saginaw, MI • 48604-9780
800.748.0423 • 989.752.4275 • Fax 989.752.4444 • www.glastender.com

Beverage Line Chillers

Model	Description	List	Wt
BLC-1/3	1/3 HP beverage line chiller, one pump	$7,314	190#
BLC-1/3-2	1/3 HP beverage line chiller, two pumps	$8,669	205#
BLC-1/2	1/2 HP beverage line chiller, one pump	$7,678	190#
BLC-1/2-2	1/2 HP beverage line chiller, two pumps	$9,034	205#
BLC-3/4	3/4 HP beverage line chiller, one pump	$8,821	200#
BLC-3/4-2	3/4 HP beverage line chiller, two pumps	$10,649	215#
BLC-3/4-3	3/4 HP beverage line chiller, three pumps	$12,310	230#

Configurable Options

Model	Description	List	Wgt
Legs	6″ legs with adjustable flanged feet	$212	5#



BLC-1/3



BLC-3/4-2



BLC-3/4-3

Which line chiller size should you choose? Remote beverage line chillers are sized to handle different length runs. If two separate conduits are involved, then the lengths of the two runs must be added together to determine the total run requirement. The run length is calculated as the distance between the line chiller and the beverage tower in a single pass glycol conduit, including any rise or fall.



LCS-G

(see LCS and LCR Spec Sheets for complete details)



LCR-G

The line chiller stand is 30″ high by 28-1/8″ wide by 30-1/8″ deep. Laser cut mounting holes fit all Glastender line chiller models. The stand has adjustable feet for leveling. Includes a bottom shelf for miscellaneous storage.

A line chiller wall rack is a shelf that is mounted to a structural wall. The shelf has laser cut mounting holes that correspond to the line chiller leg set mounting holes, so the line chiller can be bolted to the shelf. Line chiller rack fits all models of Glastender line chillers.

Line Chiller Stands

Model	Description	List	Wt
LCS-G	Line chiller stand, galvanized	$842	70#
LCS-S	Line chiller stand, stainless steel	$1,219	70#

Line Chiller Wall Racks

Model	Description	List	Wt
LCR-G	Wall rack, galvanized	$513	38#
LCR-S	Wall rack, stainless steel	$626	38#



CT-3-SS
(handles not included)

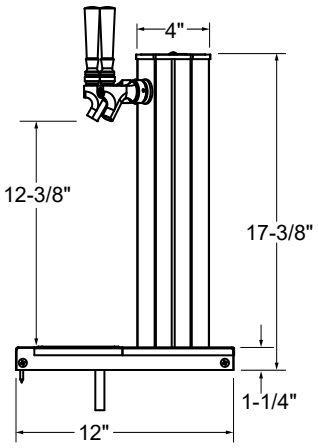

Side Elevation

NOTE: To convert standard faucet to stout style faucet, specify accessory model number BT-CFG and add $281 List per faucet.

Product Information

(see CT Spec Sheet for complete details)

Standard Features

- All stainless steel construction
- Integrated surface mount drain pan with lift-out perforated inserts
- 1/4″ shanks with 3/16″ restriction lines
- Available in grainline finish, mirror finish, or brass finish
- Available with cold plate assembly and insulated restriction lines for glycol recirculating system (specify suffix 'R' in the model number)
- Available in 1, 2, and 3 faucet sizes
- All models include all stainless steel faucets and shanks to resist corrosion and prevent metallic leaching, making them ideal for both draft beer and wine applications
- Unique internal support system for solid mounting
- Base plate serves as template for hole cutting
- Mounting holes will be pre-drilled at the factory if the host cooler is ordered with a finished top and the tower location is specified

Column Towers with Drain Pan and 72″ Restriction Lines

Grainline Finish		Mirror Finish		Brass Finish**					
Model	List	Model	List	Model	List	Faucets	Wgt	Width	System Type
CT-1-SS	$1,328	CT-1-MF*	$1,429	CT-1-PB*	$1,645	1	13#	14″	Air Cooled
CT-1-SSR*	$1,759	CT-1-MFR*	$1,849	CT-1-PBR*	$2,044	1	21#	14″	Glycol
CT-2-SS	$1,539	CT-2-MF*	$1,641	CT-2-PB*	$1,857	2	15#	14″	Air Cooled
CT-2-SSR*	$1,988	CT-2-MFR*	$2,079	CT-2-PBR*	$2,273	2	23#	14″	Glycol
CT-3-SS	$1,972	CT-3-MF*	$2,074	CT-3-PB*	$2,290	3	18#	14″	Air Cooled
CT-3-SSR*	$2,218	CT-3-MFR*	$2,310	CT-3-PBR*	$2,503	3	26#	14″	Glycol

*NOTE: These Column Towers are manufactured to order and are not returnable
**NOTE: Brass finish towers provided with mirror finish drain pan and brass finish perforated insert





Rinser faucet installation notes:

- Unit does not provide a 1″ air gap.
- Must be installed with external backflow prevention to meet applicable federal, state, and local plumbing code requirements.
- Install in-line water pressure regulator (included).
- A separate shut-off valve is recommended (not included).

Rinser Faucet Extension

Column tower drain pans can be manufactured with rinser faucet extensions to the left or right of the drain pan. A rinser faucet extension will add 5″ to the overall length of the drain pan. Add the RFE upcharge when placing your order.

NOTE: Rinser faucets not intended for use with towers mounted to a refrigerator due to risk of water line freeze up.

Model	Description	List
RFE	Rinser faucet extension	$792



BT-4-SS
(handles not included)

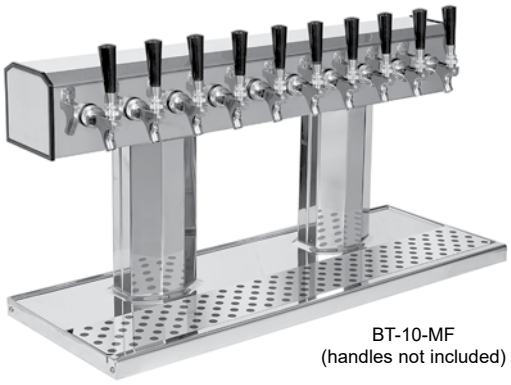

BT-10-MF
(handles not included)

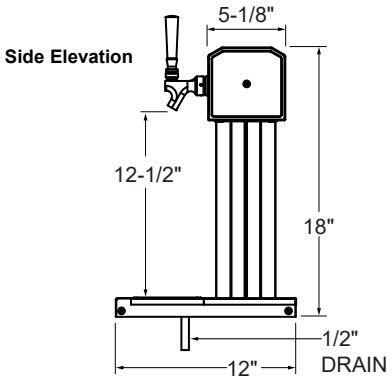

NOTE: To convert standard faucet to stout style faucet, specify accessory model number BT-CFG and add $281 List per faucet.

Tee Towers with Drain Pan 72″ Restriction Lines

Grainline Finish		Mirror Finish		Brass Finish**						
Model	List	Model	List	Model	List	Columns	Faucets	Wgt	Width	System Type
BT-4-SS	$2,456	BT-4-MF*	$2,603	BT-4-PB*	$2,954	1	4	23#	14″	Air Cooled
BT-4-SSR*	$2,579	BT-4-MFR*	$2,682	BT-4-PBR*	$3,025	1	4	31#	14″	Glycol
BT-5-SS	$2,704	BT-5-MF*	$2,838	BT-5-PB*	$3,271	1	5	27#	17″	Air Cooled
BT-5-SSR*	$2,831	BT-5-MFR*	$2,950	BT-5-PBR*	$3,338	1	5	36#	17″	Glycol
BT-6-SS	$2,948	BT-6-MF*	$3,102	BT-6-PB*	$3,581	1	6	31#	20″	Air Cooled
BT-6-SSR*	$3,126	BT-6-MFR*	$3,264	BT-6-PBR*	$3,694	1	6	41#	20″	Glycol
BT-8-SS*	$4,232	BT-8-MF*	$4,432	BT-8-PB*	$4,921	2	8	39#	26″	Air Cooled
BT-8-SSR*	$4,301	BT-8-MFR*	$4,481	BT-8-PBR*	$5,108	2	8	51#	26″	Glycol
BT-10-SS*	$4,709	BT-10-MF*	$4,943	BT-10-PB*	$5,752	2	10	57#	32″	Air Cooled
BT-10-SSR*	$4,810	BT-10-MFR*	$5,030	BT-10-PBR*	$5,744	2	10	71#	32″	Glycol
BT-12-SS*	$5,309	BT-12-MF*	$5,591	BT-12-PB*	$6,483	2	12	65#	38″	Air Cooled
BT-12-SSR*	$5,422	BT-12-MFR*	$5,673	BT-12-PBR*	$6,473	2	12	81#	38″	Glycol

*NOTE: These Tee Towers are manufactured to order and are not returnable
**NOTE: Brass finish towers provided with mirror finish drain pan and brass finish perforated insert

Product Information (see BT Spec Sheet for complete details)

Standard Features

• All stainless steel construction • Integrated surface mount drain pan with lift-out perforated inserts • 1/4″ shanks with 3/16″ restriction lines •Available in grainline finish, mirror finish,or brass finish • Available with cold plate assembly and insulated restriction lines for glycol recirculating system (specify suffix 'R' in the model number) • Available in 4, 5, 6, 8, 10, and 12 faucet sizes • All models include all stainless steel faucets and shanks to resist corrosion and prevent metallic leaching, making them ideal for both draft beer and wine applications • Unique internal support system for solid mounting • Base plate serves as template for hole cutting • Mounting holes will be pre-drilled at the factory if the host cooler is ordered with a finished top and the tower location is specified





Rinser Faucet Extension

Tee tower drain pans can be manufactured with rinser faucet extensions to the left or right of the drain pan. A rinser faucet extension will add 5″ to the overall length of the drain pan. Add the REF upcharge when placing your order.

NOTE: Rinser faucets not intended for use with towers mounted to a refrigerator due to risk of water line freeze up.

Model	Description	List
RFE	Rinser faucet extension	$792

Rinser faucet installation notes:
- Unit does not provide a 1″ air gap.
- Must be installed with external backflow prevention to meet applicable federal, state, and local plumbing code requirements.
- Install in-line water pressure regulator (included).
- A separate shut-off valve is recommended (not included).

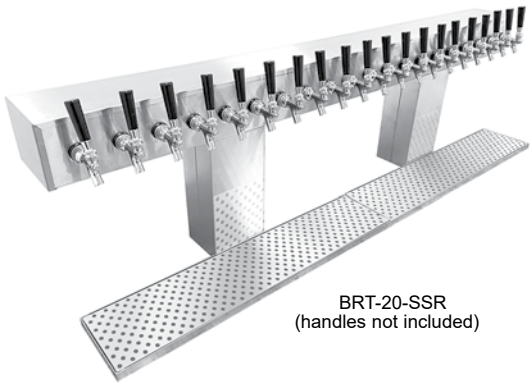

BRT-20-SSR
(handles not included)

NOTE: To convert standard faucet to stout style faucet, specify accessory model number BT-CFG and add $281 List per faucet.

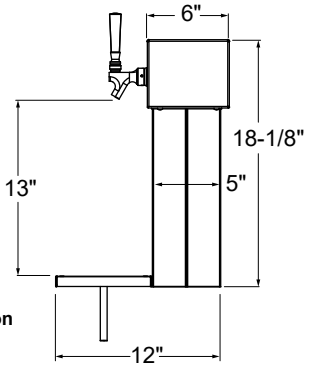

Side Elevation

Bridge Towers with Drain Pan and 72″ Restriction Lines

Grainline Finish		Mirror Finish		Brass Finish**						
Model	List	Model	List	Model	List	Columns	Faucets	wgt	Width	System Type
BRT-14-SS	$6,100	BRT-14-MF	$6,700	BRT-14-PB	$7,876	2	14	70#	44″	Air Cooled †
BRT-14-SSR	$7,684	BRT-14-MFR	$8,221	BRT-14-PBR	$9,275	2	14	84#	44″	Glycol
BRT-16-SS	$6,829	BRT-16-MF	$7,298	BRT-16-PB	$8,579	2	16	77#	50″	Air Cooled †
BRT-16-SSR	$8,421	BRT-16-MFR	$9,002	BRT-16-PBR	$10,151	2	16	93#	50″	Glycol
BRT-18-SS	$7,222	BRT-18-MF	$7,915	BRT-18-PB	$9,304	2	18	77#	27″	Air Cooled †
BRT-18-SSR	$9,143	BRT-18-MFR	$9,765	BRT-18-PBR	$11,007	2	18	103#	27″	Glycol
BRT-20-SSR	$9,869	BRT-20-MFR	$10,533	BRT-20-PBR	$11,875	2	20	112#	62″	Glycol
BRT-24-SSR	$12,477	BRT-24-MFR	$13,337	BRT-24-PBR	$15,026	3	24	140#	74″	Glycol
BRT-30-SSR	$14,661	BRT-30-MFR	$15,646	BRT-30-PBR	$17,624	3	30	168#	92″	Glycol

Product Information (see BRT Spec Sheet for complete details)

Standard Features

- All stainless steel construction
- Includes surface mount drain pan with lift-out perforated inserts
- 1/4″ shanks with 3/16″ restriction lines
- Available in grainline finish, mirror finish,or brass finish
- Available with cold plate assembly and insulated restriction lines for glycol recirculating system (specify suffix ‘R’ in the model number)
- Available in 14, 16, 18, 20, 24, and 30 faucet sizes
- Direct-draw air-cooled option available for 14, 16, and 18 faucet sizes†
- All models include all stainless steel faucets and shanks to resist corrosion and prevent metallic leaching, making them ideal for both draft beer and wine applications
- Mounting holes will be pre-drilled at the factory if the host cooler is ordered with a finished top and the tower location is specified

*NOTE: Bridge Towers are manufactured to order and are not returnable.
**NOTE: Brass finish towers provided with mirror finish drain pan and brass finish perforated insert.
†NOTE: Product is not intended for remote air-cooled installations

Rinser Faucet Extension

Bridge tower drain pans can be manufactured with rinser faucet extensions to the left or right of the drain pan. A rinser faucet extension will add 5″ to the overall length of the drain pan. Add the RFE upcharge when placing your order.

NOTE: Rinser faucets not intended for use with towers mounted to a refrigerator due to risk of water line freeze up.

Rinser faucet installation notes:

- Unit does not provide a 1″ air gap.
- Must be installed with external backflow prevention to meet applicable federal, state, and local plumbing code requirements.
- Install in-line water pressure regulator (included).
- A separate shut-off valve is recommended (not included).

Model	Description	List
RFE	Rinser faucet extension	$792



Glastender

Glastender, Inc. • 5400 North Michigan Road • Saginaw, MI • 48604-9780
800.748.0423 • 989.752.4275 • Fax 989.752.4444 • www.glastender.com

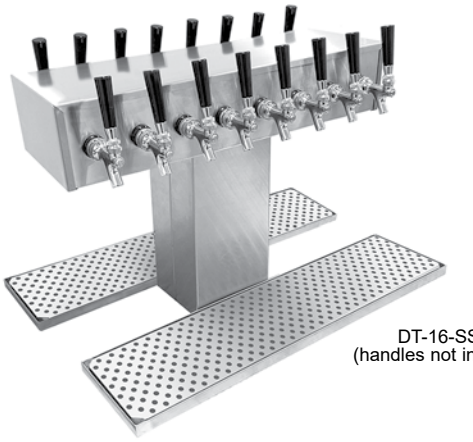

DT-16-SSR
(handles not included)

NOTE: To convert standard faucet to stout style faucet, specify accessory model number BT-CFG and add $281 List per faucet.

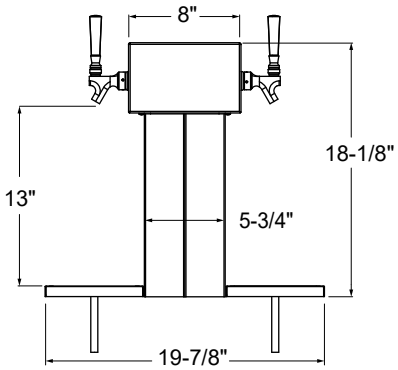

Side Elevation

Double-Sided Towers with Drain Pan and 72″ Restriction Lines

Grainline Finish		Mirror Finish		Brass Finish**						
Model	List	Model	List	Model	List	Columns	Faucets	wgt	Width	System Type
DT-16-SSR	$7,785	DT-16-MFR	$8,311	DT-16-PBR	$9,116	1	16	70#	16″	Glycol
DT-20-SSR	$9,200	DT-20-MFR	$9,798	DT-20-PBR	$10,739	1	20	85#	20″	Glycol
DT-24-SSR	$12,304	DT-24-MFR	$13,181	DT-24-PBR	$14,431	2	24	109#	24″	Glycol
DT-32-SSR	$15,183	DT-32-MFR	$16,206	DT-32-PBR	$17,718	2	32	140#	32″	Glycol
DT-36-SSR	$16,600	DT-36-MFR	$17,695	DT-36-PBR	$19,338	2	36	155#	36″	Glycol
DT-40-SSR	$18,013	DT-40-MFR	$19,182	DT-40-PBR	$20,962	2	40	170#	40″	Glycol

Product Information (see DT Spec Sheet for complete details)

Standard Features

- All stainless steel construction
- Includes surface mount drain pans with lift-out perforated inserts
- 1/4″ shanks with 3/16″ restriction lines
- Available in grainline finish, mirror finish,or brass finish
- Includes cold plate assembly and insulated restriction lines for glycol recirculating system
- Available in 16, 20, 24, 32, 36, and 40 faucet sizes
- All models include all stainless steel faucets and shanks to resist corrosion and prevent metallic leaching, making them ideal for both draft beer and wine applications

*NOTE: Double-Sided Towers are manufactured to order and are not returnable.
**NOTE: Brass finish towers provided with mirror finish drain pan and brass finish perforated insert

Rinser Faucet Extension

Double-Sided tower drain pans can be manufactured with rinser faucet extensions to the left or right of the drain pan. A rinser faucet extension will add 5″ to the overall length of the drain pan. Add the RFE upcharge when placing your order.

NOTE: Rinser faucets not intended for use with towers mounted to a refrigerator due to risk of water line freeze up.

Rinser faucet installation notes:

- Unit does not provide a 1″ air gap.
- Must be installed with external backflow prevention to meet applicable federal, state, and local plumbing code requirements.
- Install in-line water pressure regulator (included).
- A separate shut-off valve is recommended (not included).

Model	Description	List
RFE	Rinser faucet extension	$792





PB-14-SS
(handles not included)

NOTE: To convert standard faucet to stout style faucet, specify accessory model number BT-CFG and add $281 List per faucet.

*NOTE: Pipe Bridge Towers are manufactured to order and are not returnable.

Pipe Bridge Towers with Drain Pans

Grainline Finish		Mirror Finish					
Model	List	Model	List	Faucets	wgt	Width	System Type
PB-6-SS	$12,426	PB-6-MF	$13,971	6	63#	45-1/4″	Air Cooled
PB-6-SSR	$12,267	PB-6-MFR	$13,814	6	63#	45-1/4″	Glycol
PB-8-SS	$13,372	PB-8-MF	$14,948	8	68#	51-1/4″	Air Cooled
PB-8-SSR	$13,188	PB-8-MFR	$14,763	8	68#	51-1/4″	Glycol
PB-10-SS	$14,311	PB-10-MF	$15,923	10	74#	57-1/4″	Air Cooled
PB-10-SSR	$14,097	PB-10-MFR	$15,708	10	74#	57-1/4″	Glycol
PB-12-SS	$15,252	PB-12-MF	$16,894	12	80#	63-1/4″	Air Cooled
PB-12-SSR	$15,011	PB-12-MFR	$16,652	12	80#	63-1/4″	Glycol
PB-14-SS	$16,225	PB-14-MF	$17,900	14	85#	69-1/4″	Air Cooled
PB-14-SSR	$15,946	PB-14-MFR	$17,621	14	85#	69-1/4″	Glycol
PB-16-SS	$17,173	PB-16-MF	$18,884	16	91#	75-1/4″	Air Cooled
PB-16-SSR	$16,869	PB-16-MFR	$18,579	16	91#	75-1/4″	Glycol

Product Information

(see PB Spec Sheet for complete details)

Standard Features

- All stainless steel construction
- Includes surface mount drain pans with lift-out perforated inserts
- 1/4″ shanks with 3/16″ restriction lines
- Available in grainline finish or mirror finish
- Air cooled for direct-draw system or glycol cooled for recirculating system
- Available in 6, 8, 10, 12, 14, and 16 faucet sizes
- All models include all stainless steel faucets and shanks to resist corrosion and prevent metallic leaching, making them ideal for both draft beer and wine applications

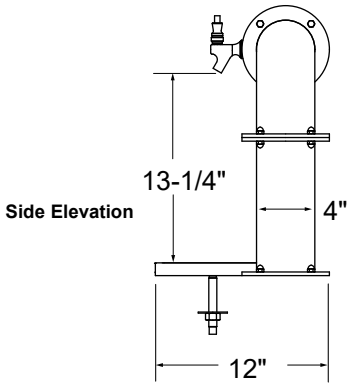

Rinser Faucet Extension

Pipe Bridge Tower rinser faucet extension drain pans are manufactured to position the rinser faucet at the center of the tower. Add the appropriate RFE upcharge when placing your order.

NOTE: Rinser faucets not intended for use with towers mounted to a refrigerator due to risk of water line freeze up.

Model	Description	List
RFE	Rinser faucet extension	$792



Rinser faucet installation notes:

- Unit does not provide a 1″ air gap.
- Must be installed with external backflow prevention to meet applicable federal, state, and local plumbing code requirements.
- Install in-line water pressure regulator (included).
- A separate shut-off valve is recommended (not included).

Glastender

Glastender, Inc. • 5400 North Michigan Road • Saginaw, MI • 48604-9780
800.748.0423 • 989.752.4275 • Fax 989.752.4444 • www.glastender.com

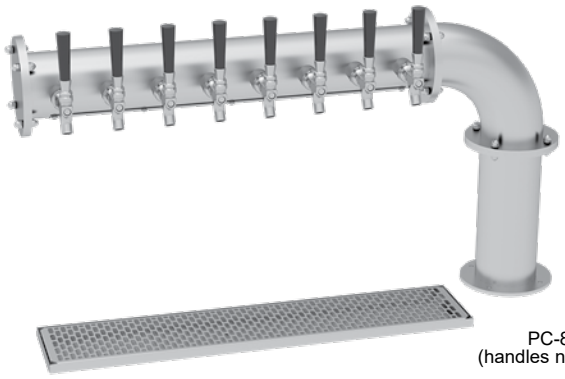

PC-8-SS
(handles not included)

NOTE: To convert standard faucet to stout style faucet, specify accessory model number BT-CFG and add $281 List per faucet.

*NOTE: Pipe Cantilever Towers are manufactured to order and are not returnable.

Pipe Cantilever Towers with Drain Pan

Grainline Finish		Mirror Finish					
Model	List	Model	List	Faucets	wgt	Width	System Type
PC-4-SS	$6,343	PC-4-MF	$6,890	4	32#	23″	Air Cooled
PC-4-SSR	$6,273	PC-4-MFR	$6,821	4	32#	23″	Glycol
PC-6-SS	$7,283	PC-6-MF	$7,867	6	38#	29″	Air Cooled
PC-6-SSR	$7.184	PC-6-MFR	$7,768	6	38#	29″	Glycol
PC-8-SS	$8,243	PC-8-MF	$8,863	8	44#	35″	Air Cooled
PC-8-SSR	$8,114	PC-8-MFR	$8,732	8	44#	35″	Glycol

Product Information

(see PC Spec Sheet for complete details)

Standard Features

- All stainless steel construction
- Includes surface mount drain pan with lift-out perforated inserts
- 1/4″ shanks with 3/16″ restriction lines
- Available in grainline finish or mirror finish
- Air cooled for direct-draw system or glycol cooled for recirculating system
- Available in 4, 6, and 8 faucet sizes
- All models include all stainless steel faucets and shanks to resist corrosion and prevent metallic leaching, making them ideal for both draft beer and wine applications

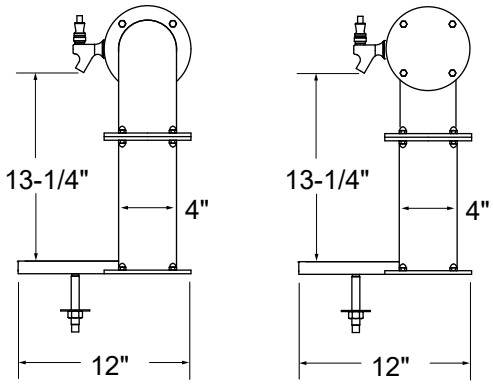

Side Elevation

Left Orientation Right Orientation

Rinser Faucet Extension

Pipe Cantilever Tower drain pans are manufactured with rinser faucet extensions to the left or right of the drain pan, dependent on the tower orientation. A rinser faucet extension will add to the overall length of the drain pan. Add the appropriate RFE upcharge when placing your order.

NOTE: Rinser faucets not intended for use with towers mounted to a refrigerator due to risk of water line freeze up.

Rinser faucet installation notes:

- Unit does not provide a 1″ air gap.
- Must be installed with external backflow prevention to meet applicable federal, state, and local plumbing code requirements.
- Install in-line water pressure regulator (included).
- A separate shut-off valve is recommended (not included).

Model	Description	List
RFE	Rinser faucet extension	$792



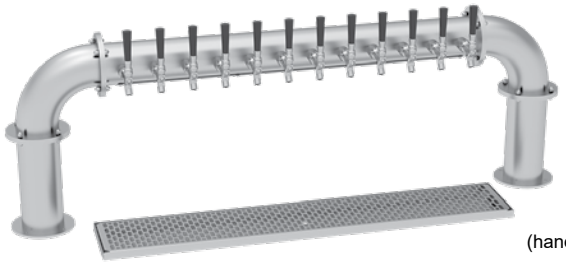

PP-12-SS
(handles not included)

NOTE: To convert standard faucet to stout style faucet, specify accessory model number BT-CFG and add $281 List per faucet.

*NOTE: Pipe Pass-Thru Towers are manufactured to order and are not returnable.

Pipe Pass-Thru Towers with Drain Pan

Grainline Finish		Mirror Finish					
Model	List	Model	List	Faucets	wgt	Width	System Type
PP-4-SS	$8,074	PP-4-MF	$9,098	4	44#	31-1/4″	Air Cooled
PP-4-SSR	$7,983	PP-4-MFR	$9,007	4	44#	31-1/4″	Glycol
PP-6-SS	$9,017	PP-6-MF	$10,075	6	49#	37-1/4″	Air Cooled
PP-6-SSR	$8,897	PP-6-MFR	$9,954	6	49#	37-1/4″	Glycol
PP-8-SS	$9,978	PP-8-MF	$11,069	8	54#	43-1/4″	Air Cooled
PP-8-SSR	$9,826	PP-8-MFR	$10,918	8	54#	43-1/4″	Glycol
PP-10-SS	$11,099	PP-10-MF	$12,227	10	61#	49-1/4″	Air Cooled
PP-10-SSR	$10,922	PP-10-MFR	$12,049	10	61#	49-1/4″	Glycol
PP-12-SS	$12,044	PP-12-MF	$13,206	12	67#	55-1/4″	Air Cooled
PP-12-SSR	$11,839	PP-12-MFR	$13,001	12	67#	55-1/4″	Glycol
PP-14-SS	$13,034	PP-14-MF	$14,223	14	73#	61-1/4″	Air Cooled
PP-14-SSR	$12,792	PP-14-MFR	$13,980	14	73#	61-1/4″	Glycol
PP-16-SS	$14,017	PP-16-MF	$15,237	16	78#	67-1/4″	Air Cooled
PP-16-SSR	$13,749	PP-16-MFR	$14,969	16	78#	67-1/4″	Glycol

Product Information

(see PP Spec Sheet for complete details)

Standard Features

- All stainless steel construction
- Includes surface mount drain pan with lift-out perforated inserts
- 1/4″ shanks with 3/16″ restriction lines
- Available in grainline finish or mirror finish
- Air cooled for direct-draw system or glycol cooled for recirculating system
- Available in 4, 6, 8, 10, 12, 14, and 16 faucet sizes
- All models include all stainless steel faucets and shanks to resist corrosion and prevent metallic leaching, making them ideal for both draft beer and wine applications

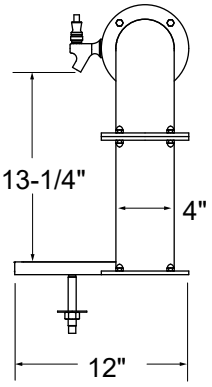

Side Elevation

Rinser Faucet Extension

Pipe Pass-Thru Tower drain pans can be manufactured with rinser faucet extensions to the left, right, or both sides of the drain pan. A rinser faucet extension will add to the overall length of the drain pan. Add the appropriate RFE upcharge when placing your order.

NOTE: Rinser faucets not intended for use with towers mounted to a refrigerator due to risk of water line freeze up.

Rinser faucet installation notes:

- Unit does not provide a 1″ air gap.
- Must be installed with external backflow prevention to meet applicable federal, state, and local plumbing code requirements.
- Install in-line water pressure regulator (included).
- A separate shut-off valve is recommended (not included).

Model	Description	List
RFE	Rinser faucet extension	$792



Glastender

Glastender, Inc. • 5400 North Michigan Road • Saginaw, MI • 48604-9780
800.748.0423 • 989.752.4275 • Fax 989.752.4444 • www.glastender.com

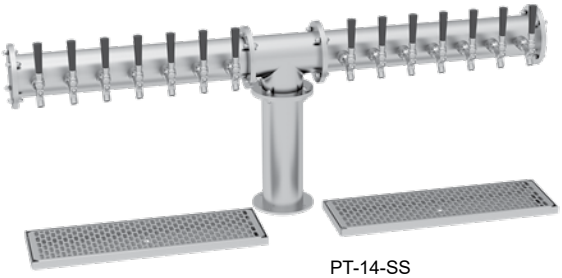

PT-14-SS
(handles not included)

NOTE: To convert standard faucet to stout style faucet, specify accessory model number BT-CFG and add $281 List per faucet.

*NOTE: Pipe Tee Towers are manufactured to order and are not returnable.

Pipe Tee Towers with Drain Pans

Grainline Finish		Mirror Finish					
Model	List	Model	List	Faucets	wgt	Width	System Type
PT-6-SS	$8,945	PT-6-MF	$9,538	6	45#	28-3/4″	Air Cooled
PT-6-SSR	$8,840	PT-6-MFR	$9,433	6	45#	28-3/4″	Glycol
PT-8-SS	$9,888	PT-8-MF	$10,497	8	51#	39-3/4″	Air Cooled
PT-8-SSR	$9,757	PT-8-MFR	$10,365	8	51#	39-3/4″	Glycol
PT-10-SS	$10,827	PT-10-MF	$11,490	10	56#	45-3/4″	Air Cooled
PT-10-SSR	$10,667	PT-10-MFR	$11,328	10	56#	45-3/4″	Glycol
PT-12-SS	$11,772	PT-12-MF	$12,461	12	62#	51-3/4″	Air Cooled
PT-12-SSR	$11,583	PT-12-MFR	$12,272	12	62#	51-3/4″	Glycol
PT-14-SS	$12,746	PT-14-MF	$13,467	14	68#	57-3/4″	Air Cooled
PT-14-SSR	$12,518	PT-14-MFR	$13,241	14	68#	57-3/4″	Glycol
PT-16-SS	$13,690	PT-16-MF	$14,447	16	73#	63-3/4″	Air Cooled
PT-16-SSR	$13,438	PT-16-MFR	$14,194	16	73#	63-3/4″	Glycol

Product Information

(see PT Spec Sheet for complete details)

Standard Features

- All stainless steel construction
- Includes surface mount drain pans with lift-out perforated inserts
- 1/4″ shanks with 3/16″ restriction lines
- Available in grainline finish or mirror finish
- Air cooled for direct-draw system or glycol cooled for recirculating system
- Available in 6, 8, 10, 12, 14, and 16 faucet sizes
- All models include all stainless steel faucets and shanks to resist corrosion and prevent metallic leaching, making them ideal for both draft beer and wine applications

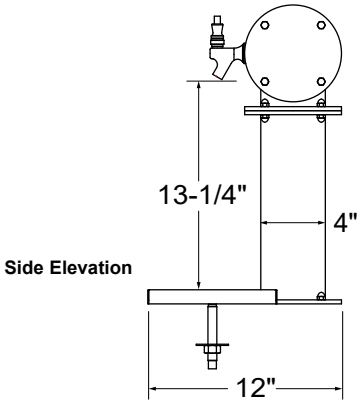

Side Elevation

Rinser Faucet Extension

Pipe Tee Tower rinser faucet extension drain pans are manufactured to position the rinser faucet at the center of the tower. Add the appropriate RFE upcharge when placing your order.

NOTE: Rinser faucets not intended for use with towers mounted to a refrigerator due to risk of water line freeze up.

Rinser faucet installation notes:

- Unit does not provide a 1″ air gap.
- Must be installed with external backflow prevention to meet applicable federal, state, and local plumbing code requirements.
- Install in-line water pressure regulator (included).
- A separate shut-off valve is recommended (not included).

Model	Description	List
RFE	Rinser faucet extension	$792



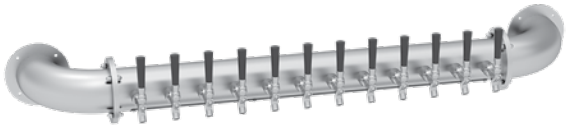

PW-12-SS
(handles not included)



NOTE: To convert standard faucet to stout style faucet, specify accessory model number BT-CFG and add $281 List per faucet.

*NOTE: Pipe Wall Towers are manufactured to order and are not returnable.

Pipe Wall Towers with Drain Pan

Grainline Finish		Mirror Finish					
Model	List	Model	List	Faucets	wgt	Width	System Type
PW-4-SS	$6,388	PW-4-MF	$7,415	4	33#	31-1/4″	Air Cooled
PW-4-SSR	$6,317	PW-4-MFR	$7,346	4	33#	31-1/4″	Glycol
PW-6-SS	$7,335	PW-6-MF	$8,392	6	39#	37-1/4″	Air Cooled
PW-6-SSR	$7,236	PW-6-MFR	$8,293	6	39#	37-1/4″	Glycol
PW-8-SS	$8,274	PW-8-MF	$9,369	8	44#	43-1/4″	Air Cooled
PW-8-SSR	$8,127	PW-8-MFR	$9,222	8	44#	43-1/4″	Glycol
PW-10-SS	$9,416	PW-10-MF	$10,540	10	51#	49-1/4″	Air Cooled
PW-10-SSR	$9,260	PW-10-MFR	$10,385	10	51#	49-1/4″	Glycol
PW-12-SS	$10,361	PW-12-MF	$11,520	12	56#	55-1/4″	Air Cooled
PW-12-SSR	$10,178	PW-12-MFR	$11,337	12	56#	55-1/4″	Glycol
PW-14-SS	$11,320	PW-14-MF	$12,506	14	62#	61-1/4″	Air Cooled
PW-14-SSR	$11,065	PW-14-MFR	$12,251	14	62#	61-1/4″	Glycol
PW-16-SS	$12,299	PW-16-MF	$13,516	16	68#	67-1/4″	Air Cooled
PW-16-SSR	$12,018	PW-16-MFR	$13,234	16	68#	67-1/4″	Glycol

Product Information

(see PW Spec Sheet for complete details)

Standard Features

- All stainless steel construction
- Includes surface mount drain pan with lift-out perforated inserts
- 1/4″ shanks with 3/16″ restriction lines
- Available in grainline finish or mirror finish
- Air cooled for direct-draw system or glycol cooled for recirculating system
- Available in 4, 6, 8, 10, 12, 14, and 16 faucet sizes
- All models include all stainless steel faucets and shanks to resist corrosion and prevent metallic leaching, making them ideal for both draft beer and wine applications

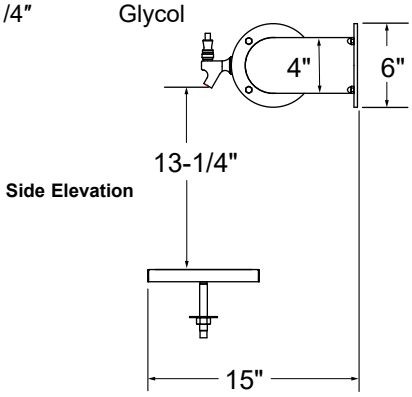

Side Elevation

Rinser Faucet Extension

Pipe Wall Tower drain pans can be manufactured with rinser faucet extensions to the left, right, or both sides of the drain pan. A rinser faucet extension will add to the overall length of the drain pan. Add the appropriate RFE upcharge when placing your order.

NOTE: Rinser faucets not intended for use with towers mounted to a refrigerator due to risk of water line freeze up.

Rinser faucet installation notes:

- Unit does not provide a 1″ air gap.
- Must be installed with external backflow prevention to meet applicable federal, state, and local plumbing code requirements.
- Install in-line water pressure regulator (included).
- A separate shut-off valve is recommended (not included).

Model	Description	List
RFE	Rinser faucet extension	$792



Glastender

Glastender, Inc. • 5400 North Michigan Road • Saginaw, MI • 48604-9780
800.748.0423 • 989.752.4275 • Fax 989.752.4444 • www.glastender.com

Surface-Mount Drain Pan*



SM-DP8X23

Drop-In Drain Pans

Model	Overall Dimensions	List	Weight
SM-DP8X11	8″ x 11″	$568	5#
SM-DP8X14	8″ x 14″	$584	6#
SM-DP8X17	8″ x 17″	$602	7#
SM-DP8X20	8″ x 20″	$620	8#
SM-DP8X23	8″ x 23″	$636	9#
SM-DP8X26	8″ x 26″	$654	10#
SM-DP8X32	8″ x 32″	$687	12#
SM-DP8X38	8″ x 38″	$722	14#
SM-DP8X44	8″ x 44″	$805	16#
SM-DP8X50	8″ x 50″	$887	18#
SM-DP8X56	8″ x 56″	$1,055	20#
SM-DP8X62	8″ x 62″	$1,279	22#

Configurable Options

One rinser faucet	$454
Two rinser faucets	$908

Rinser Faucet Options

Model	A	B	None	One	Two
SM-DP8X11	11"	5-1/2"	X	-	-
SM-DP8X14	14"	7"	X	-	-
SM-DP8X17	17"	8-1/2"	X	-	-
SM-DP8X20	20"	10"	X	X	-
SM-DP8X23	23"	11-1/2"	X	-	-
SM-DP8X26	26"	13"	X	X	X
SM-DP8X32	32"	16"	X	X	X
SM-DP8X38	38"	19"	X	X	X
SM-DP8X44	44"	22"	X	X	X
SM-DP8X50	50"	25"	X	X	X
SM-DP8X56	56"	28"	-	X	X
SM-DP8X62	62"	31"	-	-	X

Product Information

(see SM-DP Spec Sheet for complete details)

Standard Features

- All stainless steel
- 20 gauge stainless steel pan with removable perforated inserts
- Drain consists of 1/2″ threaded tailpiece that exits from the bottom of the unit

*NOTE: Surface-Mount Drain Pans are manufactured to order and are not returnable.

Side Elevations

With no rinser faucet

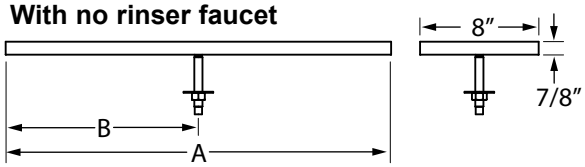

With one rinser faucet

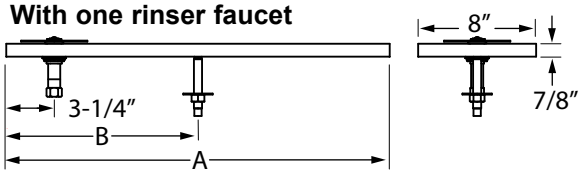

With two rinser faucets

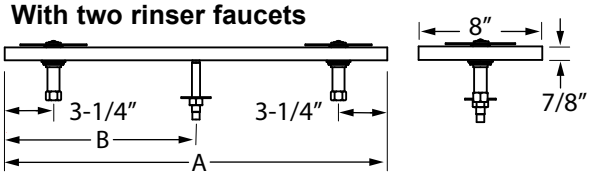

Rinser Faucet Installation Notes

- Unit does not provide a 1" air gap.
- Must be installed with external backflow prevention to meet applicable federal, state, and local plumbing code requirements.
- Install in-line water pressure regulator (included).
- A separate shut-off valve is recommended (not included).

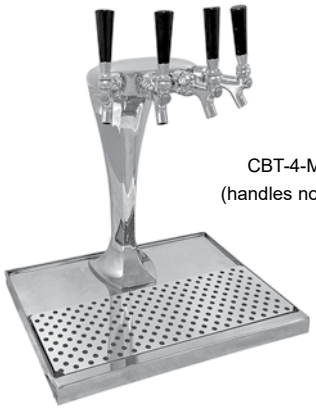

CBT-4-MFR
(handles not included)

NOTE: To convert standard faucet to stout style faucet, specify accessory model number BT-CFG and add $281 List per faucet.

*NOTE: Cobra Towers are manufactured to order and are not returnable.
**NOTE: Brass finish towers provided with mirror finish drain pan and brass finish perforated insert

Cobra Towers with Drain Pan and 72″ Restriction Lines

Mirror Finish		Brass Finish**					
Model	List	Model	List	Faucets	WGT	Width	System Type
CBT-1-MF	$3,789	CBT-1-GF	$3,738	1	18#	14"	Air Cooled
CBT-1-MFR	$3,677	CBT-1-GFR	$3,488	1	18#	14"	Glycol
CBT-2-MF	$4,478	CBT-2-GF	$5,112	2	19#	14"	Air Cooled
CBT-2-MFR	$4,195	CBT-2-GFR	$4,809	2	19#	14"	Glycol
CBT-3-MF	$6,117	CBT-3-GF	$6,015	3	20#	18"	Air Cooled
CBT-3-MFR	$5,833	CBT-3-GFR	$5,753	3	20#	18"	Glycol
CBT-4-MF	$6,766	CBT-4-GF	$7,687	4	21#	18"	Air Cooled
CBT-4-MFR	$6,489	CBT-4-GFR	$6,885	4	21#	18"	Glycol

Product Information (see CBT Spec Sheet for complete details)

Standard Features

- Integrated surface mount drain pan with lift-out perforated inserts
- 1/4″ shanks with 3/16″ restriction lines
- Available in mirror finish or gold finish.
- Available with insulated cold plate assembly for recirculating system
- Mounting hardware for top thickness up to 4″ (see Configurable Options for additional top thicknesses)
- All models include all stainless steel faucets and shanks to resist corrosion and prevent metallic leaching, making them ideal for both draft beer and wine applications
- Available with rinser faucet extension to the left or right of the drain pan. Specify RFE accessory
- Mounting holes will be pre-drilled at the factory if the host cooler is ordered with a finished top and the tower location is specified

Configurable Options - Mounting Hardware

Top thicknesses up to 6″	$84
Top thicknesses up to 8″	$233

Rinser Faucet Extension

COBRA tower drain pans can be manufactured with rinser faucet extensions to the left or right of the drain pan. A rinser faucet extension will add 5″ to the overall length of the drain pan. Add the RFE upcharge when placing your order.

NOTE: Rinser faucets not intended for use with towers mounted to a refrigerator due to risk of water line freeze up.

Rinser faucet installation notes:

- Unit does not provide a 1″ air gap.
- Must be installed with external backflow prevention to meet applicable federal, state, and local plumbing code requirements.
- Install in-line water pressure regulator (included).
- A separate shut-off valve is recommended (not included).

Model	Description	List
RFE	Rinser faucet extension	$792



Glastender

Glastender, Inc. • 5400 North Michigan Road • Saginaw, MI • 48604-9780
800.748.0423 • 989.752.4275 • Fax 989.752.4444 • www.glastender.com



BFT-3-MF
(handles not included)

NOTE: To convert standard faucet to stout style faucet, specify accessory model number BT-CFG and add $281 List per faucet.

*NOTE: Black Forest Towers are manufactured to order and are not returnable.
**NOTE: Brass finish towers provided with mirror finish drain pan and brass finish perforated insert

Plan View

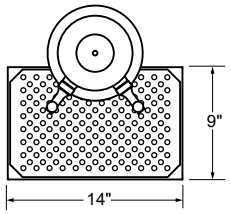

Side Elevation

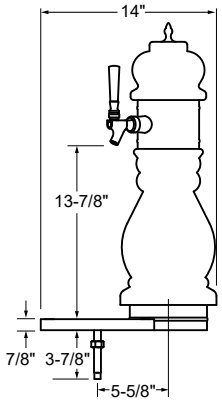

Black Forest Towers with Drain Pan and 72″ Restriction Lines

Mirror Finish		Polished Brass Finish**					
Model	List	Model	List	Faucets	WGT	Width	System Type
BFT-2-MF	$6,950	BFT-2-PB	$7,028	2	48#	14"	Air Cooled
BFT-2-MFR	$7,079	BFT-2-PBR	$7,156	2	48#	14"	Glycol
BFT-3-MF	$7,858	BFT-3-PB	$7,957	3	48#	14"	Air Cooled
BFT-3-MFR	$7,970	BFT-3-PBR	$8,068	3	48#	14"	Glycol

Product Information (see BFT Spec Sheet for complete details)

Standard Features

- 1/4″ stainless steel shanks with 3/16″ restriction lines
- All stainless steel faucets
- Surface-mount, stainless steel drain pan with removable, perforated insert

Configurable Options

- 2 or 3 faucets
- Mirror or polished brass finish
- Air cooled for direct-draw system or glycol cooled for recirculating system
- Numerous ceramic color finishes; consult factory for details
- Rinser faucet extension to the left or right of the drain pan; specify RFE option

Rinser Faucet Extension

Black forest tower drain pans can be manufactured with rinser faucet extensions to the left or right of the drain pan. A rinser faucet extension will add 5″ to the overall length of the drain pan. Add the RFE upcharge when placing your order.

NOTE: Rinser faucets not intended for use with towers mounted to a refrigerator due to risk of water line freeze up.

Rinser faucet installation notes:

- Unit does not provide a 1″ air gap.
- Must be installed with external backflow prevention to meet applicable federal, state, and local plumbing code requirements.
- Install in-line water pressure regulator (included).
- A separate shut-off valve is recommended (not included).

Model	Description	List
RFE	Rinser faucet extension	$792





BM-2-MF
(handles not included)

NOTE: To convert standard faucet to stout style faucet, specify accessory model number BT-CFG and add $281 List per faucet.

*NOTE: Braumeister Towers are manufactured to order and are not returnable.
**NOTE: Brass finish towers provided with mirror finish drain pan and brass finish perforated insert

2, 3, & 4 Faucets

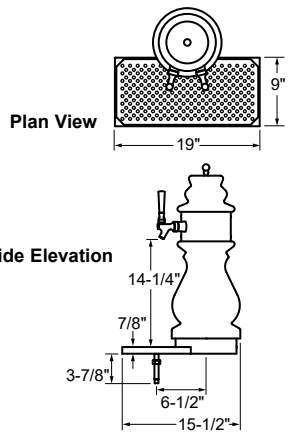

5, 6, & 8 Faucets

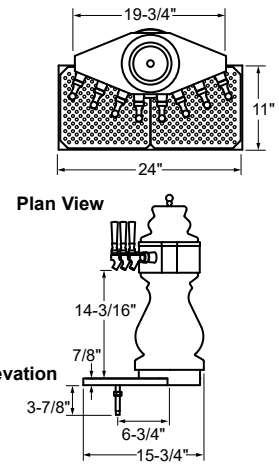

Braumeister Towers with Drain Pan and 72″ Restriction Lines

Mirror Finish		Polished Brass Finish**					
Model	List	Model	List	Faucets	WGT	Width	System Type
BM-2-MF	$6,997	BM-2-PB	$7,101	2	48#	19"	Air Cooled
BM-2-MFR	$7,126	BM-2-PBR	$7,230	2	48#	19"	Glycol
BM-3-MF	$7,868	BM-3-PB	$7,972	3	48#	19"	Air Cooled
BM-3-MFR	$7,979	BM-3-PBR	$8,083	3	48#	19"	Glycol
BM-4-MF	$8,146	BM-4-PB	$8,250	4	48#	19"	Air Cooled
BM-4-MFR	$8,447	BM-4-PBR	$8,551	4	48#	19"	Glycol
BM-5-MF	$10,464	BM-5-PB	$10,628	5	101#	24"	Air Cooled
BM-5-MFR	$10,747	BM-5-PBR	$10,911	5	101#	24"	Glycol
BM-6-MF	$11,184	BM-6-PB	$11,348	6	101#	24"	Air Cooled
BM-6-MFR	$11,483	BM-6-PBR	$11,647	6	101#	24"	Glycol
BM-8-MF	$12,452	BM-8-PB	$12,615	8	101#	24"	Air Cooled
BM-8-MFR	$12,690	BM-8-PBR	$12,853	8	101#	24"	Glycol

Product Information (see BM Spec Sheet for complete details)

Standard Features

- 1/4″ stainless steel shanks with 3/16″ restriction lines
- All stainless steel faucets
- Surface-mount, stainless steel drain pan with removable, perforated insert

Configurable Options

- 2, 3, 4, 5, 6, or 8 faucets
- Mirror or polished brass finish
- Air cooled for direct-draw system or glycol cooled for recirculating system
- Numerous ceramic color finishes; consult factory for details
- Rinser faucet extension to the left or right of the drain pan; specify RFE option

Rinser Faucet Extension

Braumeister tower drain pans can be manufactured with rinser faucet extensions to the left or right of the drain pan. A rinser faucet extension will add 5″ to the overall length of the drain pan. Add the RFE upcharge when placing your order.

NOTE: Rinser faucets not intended for use with towers mounted to a refrigerator due to risk of water line freeze up.

Rinser faucet installation notes:

- Unit does not provide a 1″ air gap.
- Must be installed with external backflow prevention to meet applicable federal, state, and local plumbing code requirements.
- Install in-line water pressure regulator (included).
- A separate shut-off valve is recommended (not included).

Model	Description	List
RFE	Rinser faucet extension	$792



Glastender

Glastender, Inc. • 5400 North Michigan Road • Saginaw, MI • 48604-9780
800.748.0423 • 989.752.4275 • Fax 989.752.4444 • www.glastender.com

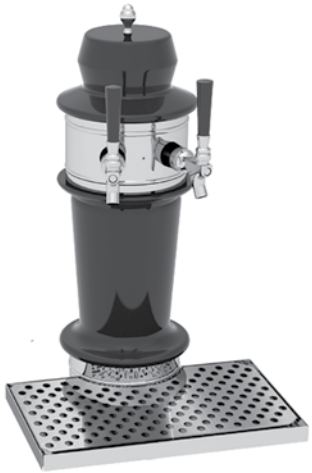

MCT-2-PB
(handles not included)

NOTE: To convert standard faucet to stout style faucet, specify accessory model number BT-CFG and add $281 List per faucet.

*NOTE: Monaco Towers are manufactured to order and are not returnable.
**NOTE: Brass finish towers provided with mirror finish drain pan and brass finish perforated insert

Plan View

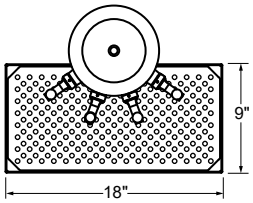

Side Elevation

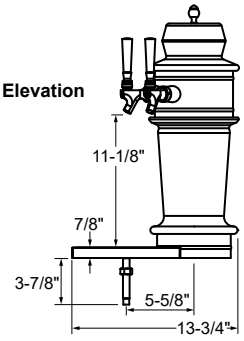

Monaco Towers with Drain Pan and 72″ Restriction Lines

Mirror Finish		Polished Brass Finish**					
Model	List	Model	List	Faucets	WGT	Width	System Type
MCT-2-MF	$6,950	MCT-2-PB	$7,028	2	48#	18"	Air Cooled
MCT-2-MFR	$7,079	MCT-2-PBR	$7,156	2	48#	18"	Glycol
MCT-3-MF	$7,858	MCT-3-PB	$7,957	3	48#	18"	Air Cooled
MCT-3-MFR	$7,970	MCT-3-PBR	$8,068	3	48#	18"	Glycol
MCT-4-MF	$8,138	MCT-4-PB	$8,237	4	48#	18"	Air Cooled
MCT-4-MFR	$8,438	MCT-4-PBR	$8,536	4	48#	18"	Glycol

Product Information (see MCT Spec Sheet for complete details)

Standard Features
- 1/4″ stainless steel shanks with 3/16″ restriction lines
- All stainless steel faucets
- Surface-mount, stainless steel drain pan with removable, perforated insert

Configurable Options
- 2, 3, or 4 faucets
- Mirror or polished brass finish
- Air cooled for direct-draw system or glycol cooled for recirculating system
- Numerous ceramic color finishes; consult factory for details
- Rinser faucet extension to the left or right of the drain pan; specify RFE option

Rinser Faucet Extension

Monaco tower drain pans can be manufactured with rinser faucet extensions to the left or right of the drain pan. A rinser faucet extension will add 5″ to the overall length of the drain pan. Add the RFE upcharge when placing your order.

NOTE: Rinser faucets not intended for use with towers mounted to a refrigerator due to risk of water line freeze up.

Rinser faucet installation notes:
- Unit does not provide a 1″ air gap.
- Must be installed with external backflow prevention to meet applicable federal, state, and local plumbing code requirements.
- Install in-line water pressure regulator (included).
- A separate shut-off valve is recommended (not included).

Model	Description	List
RFE	Rinser faucet extension	$792



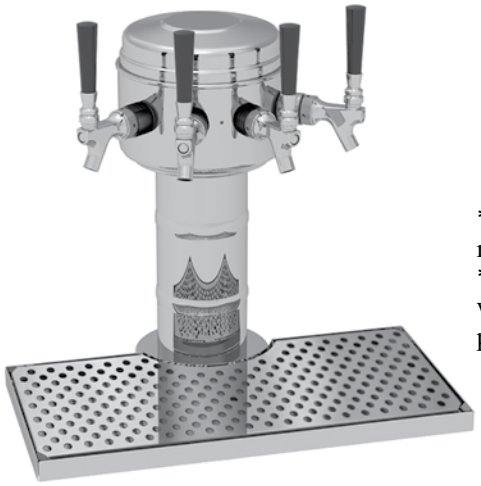

MMT-4-MF
(handles not included)

NOTE: To convert standard faucet to stout style faucet, specify accessory model number BT-CFG and add $281 List per faucet.

*NOTE: Mini Mushroom Towers are manufactured to order and are not returnable.
**NOTE: Brass finish towers provided with mirror finish drain pan and brass finish perforated insert

Plan View

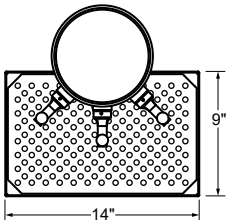

Side Elevation

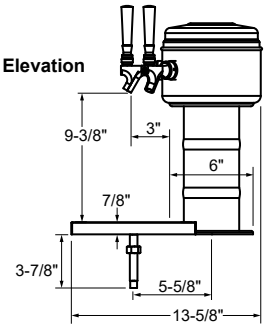

Mini Mushroom Towers with Drain Pan and 72″ Restriction Lines

Mirror Finish		Polished Brass Finish**					
Model	List	Model	List	Faucets	WGT	Width	System Type
MMT-3-MF	$5,634	MMT-3-PB	$6,210	3	26#	14"	Air Cooled
MMT-3-MFR	$6,615	MMT-3-PBR	$6,808	3	26#	14"	Glycol
MMT-4-MF	$6,113	MMT-4-PB	$6,550	4	26#	14"	Air Cooled
MMT-4-MFR	$6,465	MMT-4-PBR	$7,030	4	26#	14"	Glycol
MMT-5-MF	$6,514	MMT-5-PB	$7,028	5	26#	14"	Air Cooled
MMT-5-MFR	$6,946	MMT-5-PBR	$7,677	5	26#	14"	Glycol

Product Information (see MMT Spec Sheet for complete details)

Standard Features

- 1/4″ stainless steel shanks with 3/16″ restriction lines
- All stainless steel faucets
- Surface-mount, stainless steel drain pan with removable, perforated insert

Configurable Options

- 3, 4, or 5 faucets
- Mirror or polished brass finish
- Air cooled for direct-draw system or glycol cooled for recirculating system
- Rinser faucet extension to the left or right of the drain pan; specify RFE option

Rinser Faucet Extension

Mini Mushroom tower drain pans can be manufactured with rinser faucet extensions to the left or right of the drain pan. A rinser faucet extension will add 5″ to the overall length of the drain pan. Add the RFE upcharge when placing your order.

NOTE: Rinser faucets not intended for use with towers mounted to a refrigerator due to risk of water line freeze up.

Rinser faucet installation notes:

- Unit does not provide a 1″ air gap.
- Must be installed with external backflow prevention to meet applicable federal, state, and local plumbing code requirements.
- Install in-line water pressure regulator (included).
- A separate shut-off valve is recommended (not included).

Model	Description	List
RFE	Rinser faucet extension	$792



Glastender

Glastender, Inc. • 5400 North Michigan Road • Saginaw, MI • 48604-9780
800.748.0423 • 989.752.4275 • Fax 989.752.4444 • www.glastender.com

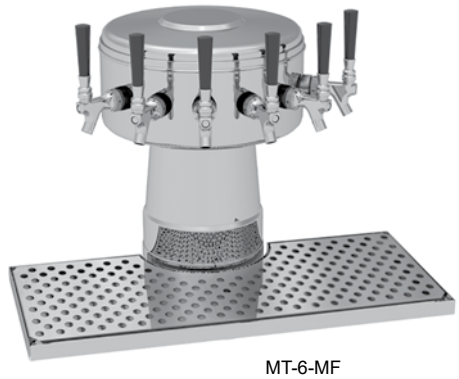

MT-6-MF

(handles not included)

NOTE: To convert standard faucet to stout style faucet, specify accessory model number BT-CFG and add $281 List per faucet.

*NOTE: Mushroom Towers are manufactured to order and are not returnable.
**NOTE: Brass finish towers provided with mirror finish drain pan and brass finish perforated insert

Plan View

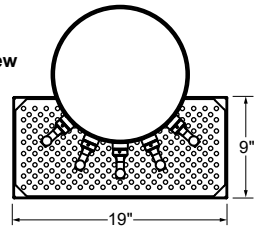

Side Elevation

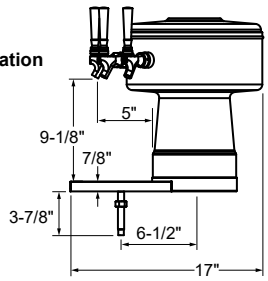

Mushroom Towers with Drain Pan and 72″ Restriction Lines

Mirror Finish		Polished Brass Finish**					
Model	List	Model	List	Faucets	WGT	Width	System Type
MT-4-MF	$6,755	MT-4-PB	$8,055	4	37#	19"	Air Cooled
MT-4-MFR	$6,983	MT-4-PBR	$8,303	4	37#	19"	Glycol
MT-5-MF	$7,024	MT-5-PB	$8,446	5	37#	19"	Air Cooled
MT-5-MFR	$7,356	MT-5-PBR	$8,804	5	37#	19"	Glycol
MT-6-MF	$7,524	MT-6-PB	$9,389	6	37#	19"	Air Cooled
MT-6-MFR	$7,964	MT-6-PBR	$9,859	6	37#	19"	Glycol

Product Information (see MT Spec Sheet for complete details)

Standard Features

- 1/4″ stainless steel shanks with 3/16″ restriction lines
- All stainless steel faucets
- Surface-mount, stainless steel drain pan with removable, perforated insert

Configurable Options

- 4, 5, or 6 faucets
- Mirror or polished brass finish
- Air cooled for direct-draw system or glycol cooled for recirculating system
- Rinser faucet extension to the left or right of the drain pan; specify RFE option

Rinser Faucet Extension

Mushroom tower drain pans can be manufactured with rinser faucet extensions to the left or right of the drain pan. A rinser faucet extension will add 5″ to the overall length of the drain pan. Add the RFE upcharge when placing your order.

NOTE: Rinser faucets not intended for use with towers mounted to a refrigerator due to risk of water line freeze up.

Rinser faucet installation notes:

- Unit does not provide a 1″ air gap.
- Must be installed with external backflow prevention to meet applicable federal, state, and local plumbing code requirements.
- Install in-line water pressure regulator (included).
- A separate shut-off valve is recommended (not included).

Model	Description	List
RFE	Rinser faucet extension	$792





RBT-3-MF
(handles not included)

NOTE: To convert standard faucet to stout style faucet, specify accessory model number BT-CFG and add $281 List per faucet.

*NOTE: Roman Towers are manufactured to order and are not returnable.
**NOTE: Brass finish towers provided with mirror finish drain pan and brass finish perforated insert

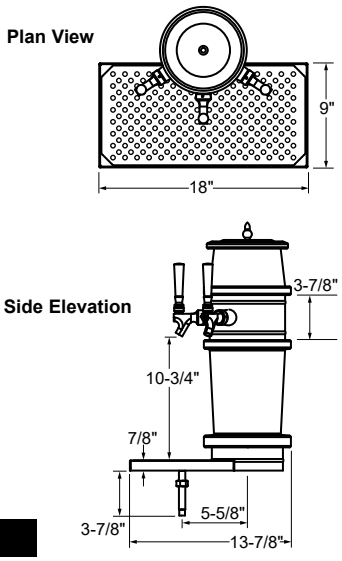

Roman Towers with Drain Pan and 72″ Restriction Lines

Mirror Finish		Polished Brass Finish**					
Model	List	Model	List	Faucets	WGT	Width	System Type
RBT-2-MF	$6,950	RBT-2-PB	$7,028	2	48#	18"	Air Cooled
RBT-2-MFR	$7,079	RBT-2-PBR	$7,156	2	48#	18"	Glycol
RBT-3-MF	$7,858	RBT-3-PB	$7,957	3	48#	18"	Air Cooled
RBT-3-MFR	$7,970	RBT-3-PBR	$8,068	3	48#	18"	Glycol
RBT-4-MF	$8,138	RBT-4-PB	$8,237	4	48#	18"	Air Cooled
RBT-4-MFR	$8,438	RBT-4-PBR	$8,536	4	48#	18"	Glycol

Product Information (see RBT Spec Sheet for complete details)

Standard Features

- 1/4″ stainless steel shanks with 3/16″ restriction lines
- All stainless steel faucets
- Surface-mount, stainless steel drain pan with removable, perforated insert

Configurable Options

- 2, 3, or 4 faucets
- Mirror or polished brass finish
- Air cooled for direct-draw system or glycol cooled for recirculating system
- Numerous ceramic color finishes; consult factory for details
- Rinser faucet extension to the left or right of the drain pan; specify RFE option

Rinser Faucet Extension

Roman tower drain pans can be manufactured with rinser faucet extensions to the left or right of the drain pan. A rinser faucet extension will add 5″ to the overall length of the drain pan. Add the RFE upcharge when placing your order.

NOTE: Rinser faucets not intended for use with towers mounted to a refrigerator due to risk of water line freeze up.

Rinser faucet installation notes:

- Unit does not provide a 1″ air gap.
- Must be installed with external backflow prevention to meet applicable federal, state, and local plumbing code requirements.
- Install in-line water pressure regulator (included).
- A separate shut-off valve is recommended (not included).

Model	Description	List
RFE	Rinser faucet extension	$792



Glastender

Glastender, Inc. • 5400 North Michigan Road • Saginaw, MI • 48604-9780
800.748.0423 • 989.752.4275 • Fax 989.752.4444 • www.glastender.com



RCT-2-PB
(handles not included)

NOTE: To convert standard faucet to stout style faucet, specify accessory model number BT-CFG and add $281 List per faucet.

*NOTE: Rembrandt Towers are manufactured to order and are not returnable.
**NOTE: Brass finish towers provided with mirror finish drain pan and brass finish perforated insert

Plan View

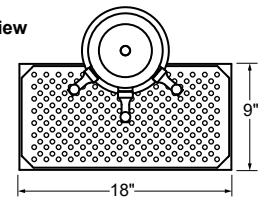

Side Elevation

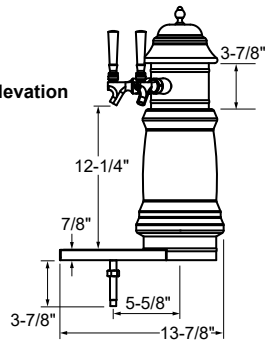

Rembrandt Towers with Drain Pan and 72″ Restriction Lines

Mirror Finish		Polished Brass Finish**					
Model	List	Model	List	Faucets	WGT	Width	System Type
RCT-2-MF	$6,950	RCT-2-PB	$7,028	2	48#	18"	Air Cooled
RCT-2-MFR	$7,079	RCT-2-PBR	$7,156	2	48#	18"	Glycol
RCT-3-MF	$7,858	RCT-3-PB	$7,957	3	48#	18"	Air Cooled
RCT-3-MFR	$7,970	RCT-3-PBR	$8,068	3	48#	18"	Glycol

Product Information (see RCT Spec Sheet for complete details)

Standard Features
- 1/4″ stainless steel shanks with 3/16″ restriction lines
- All stainless steel faucets
- Surface-mount, stainless steel drain pan with removable, perforated insert

Configurable Options
- 2 or 3 faucets
- Mirror or polished brass finish
- Air cooled for direct-draw system or glycol cooled for recirculating system
- Numerous ceramic color finishes; consult factory for details
- Rinser faucet extension to the left or right of the drain pan; specify RFE option

Rinser Faucet Extension

Rembrandt tower drain pans can be manufactured with rinser faucet extensions to the left or right of the drain pan. A rinser faucet extension will add 5″ to the overall length of the drain pan. Add the RFE upcharge when placing your order.

NOTE: Rinser faucets not intended for use with towers mounted to a refrigerator due to risk of water line freeze up.

Rinser faucet installation notes:
- Unit does not provide a 1″ air gap.
- Must be installed with external backflow prevention to meet applicable federal, state, and local plumbing code requirements.
- Install in-line water pressure regulator (included).
- A separate shut-off valve is recommended (not included).

Model	Description	List
RFE	Rinser faucet extension	$792



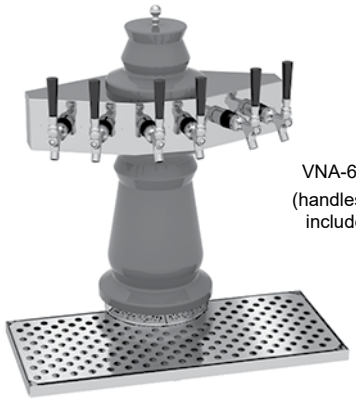

VNA-6-MF
(handles not included)

NOTE: To convert standard faucet to stout style faucet, specify accessory model number BT-CFG and add $281 List per faucet.

*NOTE: Vienna Towers are manufactured to order and are not returnable.
**NOTE: Brass finish towers provided with mirror finish drain pan and brass finish perforated insert

2, 3, & 4 Faucets

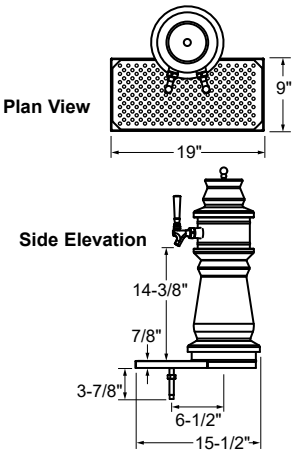

5, 6, & 8 Faucets

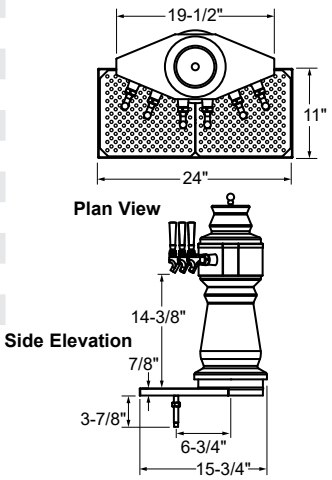

Vienna Towers with Drain Pan and 72″ Restriction Lines

Mirror Finish		Polished Brass Finish**					
Model	List	Model	List	Faucets	WGT	Width	System Type
VNA-2-MF	$6,997	VNA-2-PB	$7,101	2	48#	19"	Air Cooled
VNA-2-MFR	$7,126	VNA-2-PBR	$7,230	2	48#	19"	Glycol
VNA-3-MF	$7,868	VNA-3-PB	$7,972	3	48#	19"	Air Cooled
VNA-3-MFR	$7,979	VNA-3-PBR	$8,083	3	48#	19"	Glycol
VNA-4-MF	$8,146	VNA-4-PB	$8,250	4	48#	19"	Air Cooled
VNA-4-MFR	$8,447	VNA-4-PBR	$8,551	4	48#	19"	Glycol
VNA-5-MF	$10,464	VNA-5-PB	$10,628	5	101#	24"	Air Cooled
VNA-5-MFR	$10,747	VNA-5-PBR	$10,911	5	101#	24"	Glycol
VNA-6-MF	$11,184	VNA-6-PB	$11,348	6	101#	24"	Air Cooled
VNA-6-MFR	$11,483	VNA-6-PBR	$11,647	6	101#	24"	Glycol
VNA-8-MF	$12,452	VNA-8-PB	$12,615	8	101#	24"	Air Cooled
VNA-8-MFR	$12,690	VNA-8-PBR	$12,853	8	101#	24"	Glycol

Product Information (see VNA Spec Sheet for complete details)

Standard Features

- 1/4″ stainless steel shanks with 3/16″ restriction lines
- All stainless steel faucets
- Surface-mount, stainless steel drain pan with removable, perforated insert

Configurable Options

- 2, 3, 4, 5, 6, or 8 faucets
- Mirror or polished brass finish
- Air cooled for direct-draw system or glycol cooled for recirculating system
- Numerous ceramic color finishes; consult factory for details
- Rinser faucet extension to the left or right of the drain pan; specify RFE option

Rinser Faucet Extension

Vienna tower drain pans can be manufactured with rinser faucet extensions to the left or right of the drain pan. A rinser faucet extension will add 5″ to the overall length of the drain pan. Add the RFE upcharge when placing your order.

NOTE: Rinser faucets not intended for use with towers mounted to a refrigerator due to risk of water line freeze up.

Model	Description	List
RFE	Rinser faucet extension	$792



Rinser faucet installation notes:

- Unit does not provide a 1″ air gap.
- Must be installed with external backflow prevention to meet applicable federal, state, and local plumbing code requirements.
- Install in-line water pressure regulator (included).
- A separate shut-off valve is recommended (not included).

Glastender

Glastender, Inc. • 5400 North Michigan Road • Saginaw, MI • 48604-9780
800.748.0423 • 989.752.4275 • Fax 989.752.4444 • www.glastender.com

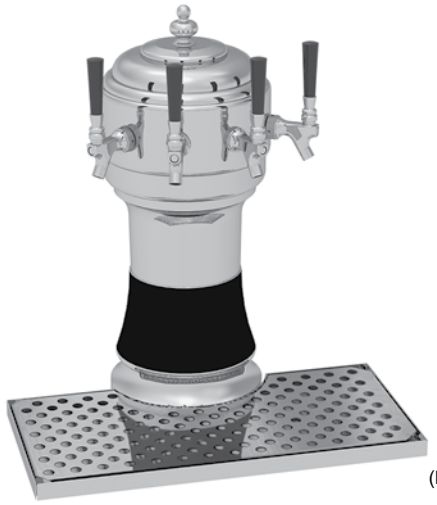

ZT-4-PB
(handles not included)

NOTE: To convert standard faucet to stout style faucet, specify accessory model number BT-CFG and add $281 List per faucet.

*NOTE: Zeus Towers are manufactured to order and are not returnable.
**NOTE: Brass finish towers provided with mirror finish drain pan and brass finish perforated insert

Plan View

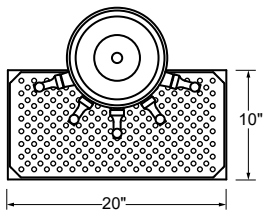

Side Elevation

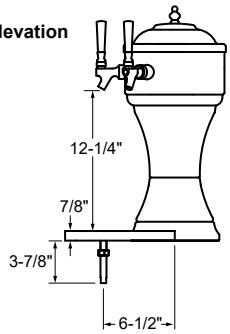

Zeus Towers with Drain Pan and 72″ Restriction Lines

Mirror Finish		Polished Brass Finish**					
Model	List	Model	List	Faucets	WGT	Width	System Type
ZT-3-MF	$6,791	ZT-3-PB	$6,912	3	48#	20"	Air Cooled
ZT-3-MFR	$6,838	ZT-3-PBR	$6,959	3	48#	20"	Glycol
ZT-4-MF	$6,956	ZT-4-PB	$7,076	4	48#	20"	Air Cooled
ZT-4-MFR	$7,302	ZT-4-PBR	$7,422	4	48#	20"	Glycol
ZT-5-MF	$7,204	ZT-5-PB	$7,324	5	101#	20"	Air Cooled
ZT-5-MFR	$7,717	ZT-5-PBR	$7,837	5	101#	20"	Glycol

Product Information (see ZT Spec Sheet for complete details)

Standard Features
- 1/4″ stainless steel shanks with 3/16″ restriction lines
- All stainless steel faucets
- Surface-mount, stainless steel drain pan with removable, perforated insert

Configurable Options
- 3, 4, or 5 faucets
- Mirror or polished brass finish
- Air cooled for direct-draw system or glycol cooled for recirculating system
- Black, white, or green ceramic base color finishes
- Rinser faucet extension to the left or right of the drain pan; specify RFE option

Rinser Faucet Extension

Zeus tower drain pans can be manufactured with rinser faucet extensions to the left or right of the drain pan. A rinser faucet extension will add 5″ to the overall length of the drain pan. Add the RFE upcharge when placing your order.

NOTE: Rinser faucets not intended for use with towers mounted to a refrigerator due to risk of water line freeze up.

Rinser faucet installation notes:
- Unit does not provide a 1″ air gap.
- Must be installed with external backflow prevention to meet applicable federal, state, and local plumbing code requirements.
- Install in-line water pressure regulator (included).
- A separate shut-off valve is recommended (not included).

Model	Description	List
RFE	Rinser faucet extension	$792



NOTE: To convert standard faucet to stout style faucet, specify accessory model number BT-CFG and add $281 List per faucet.



UC-4-SSR
Shown attached to bar
(Handles not included)



UC-5-SSR
Shown installed under bar top
with BDB-18 beer drainer

Product Information

(see UC Spec Sheet for complete details)

Standard Features: All stainless steel construction • 1/4″ shanks with 3/16″ restriction lines • Includes cold plate assembly and insulated restriction lines for glycol recirculating system • Includes all stainless steel faucets and shanks to resist corrosion and prevent metallic leaching, making them ideal for both draft beer and wine applications

NOTES:

1. Installation of the undercounter tower requires a minimum bar top overhang of 7″.
2. Undercounter towers do not include a drain pan. Glastender offers a free-standing underbar beer drainer. See model numbers BDA or BDB for the main line (page 47) or C-BD for the Choice line (page 67).
3. The beverage and glycol lines exit the bottom of the tower and are rigid, so the undercounter tower must be installed prior to installing the beer drainer. The 8, 10, and 12 faucet models have two sets of lines exiting the bottom of the tower.

Stainless Steel Undercounter Towers

Model	List	# of Faucets	Wt	Width
UC-4-SSR	$2,726	4	28#	14″
UC-5-SSR	$3,066	5	30#	17″
UC-6-SSR	$3,466	6	35#	20″
UC-8-SSR	$4,820	8	50#	26″
UC-10-SSR	$5,505	10	65#	32″
UC-12-SSR	$6,301	12	80#	38″

Product Information

(see WT Spec Sheet for complete details)

Standard Features: All stainless steel construction • Integrated drain pan with lift-out perforated inserts • 1/4″ shanks with 3/16″ restriction lines • Available with cold plate assembly and insulated restriction lines for glycol recirculating system (specify suffix ‘R’ in the model number) • Built-in wall mounting bracket • Removable front cover for access to shanks • Includes all stainless steel faucets and shanks to resist corrosion and prevent metallic leaching, making them ideal for both draft beer and wine applications

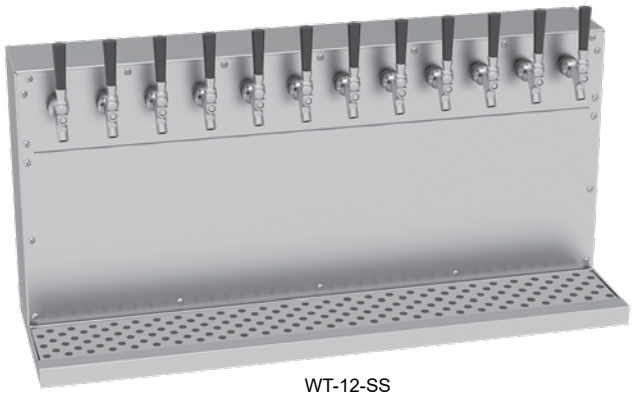

WT-12-SS
(handles not included)

Stainless Steel Wall Mount Towers

Model	List	# of Faucets	Wt	Width
WT-4-SS	$2,605	4	23#	14″
WT-4-SSR	$3,277	4	31#	14″
WT-5-SS	$2,993	5	27#	17″
WT-5-SSR	$3,618	5	36#	17″
WT-6-SS	$3,380	6	31#	20″
WT-6-SSR	$4,014	6	41#	20″
WT-8-SS	$4,178	8	39#	26″
WT-8-SSR	$5,167	8	51#	26″
WT-10-SS	$4,824	10	57#	32″
WT-10-SSR	$5,868	10	71#	32″
WT-12-SS	$5,467	12	65#	38″
WT-12-SSR	$6,658	12	81#	38″

*NOTE: Undercounter and Wall Mount Towers are manufactured to order and are not returnable



WB-6-N
(handles not included)

NOTE: To convert standard faucet to stout style faucet, specify accessory model number BT-CFG and add $281 List per faucet.

Product Information

(see WB Spec Sheet for complete details)

Standard Features

- Oak wood barrel construction
- Includes separate 300 series stainless steel surface mount drain pan with lift-out perforated inserts
- 1/4″ shanks with 3/16″ restriction lines
- Available in flat black or natural unfinished
- Available with cold plate assembly and insulated restriction lines for glycol recirculating system (specify suffix 'R' in the model number)
- Available in three through six faucet models
- Includes wall mounting brackets
- All stainless steel faucets and shanks to resist corrosion and prevent metallic leaching, making them ideal for both draft beer and wine applications

*NOTE: Wood Barrel Towers are manufactured to order and are not returnable

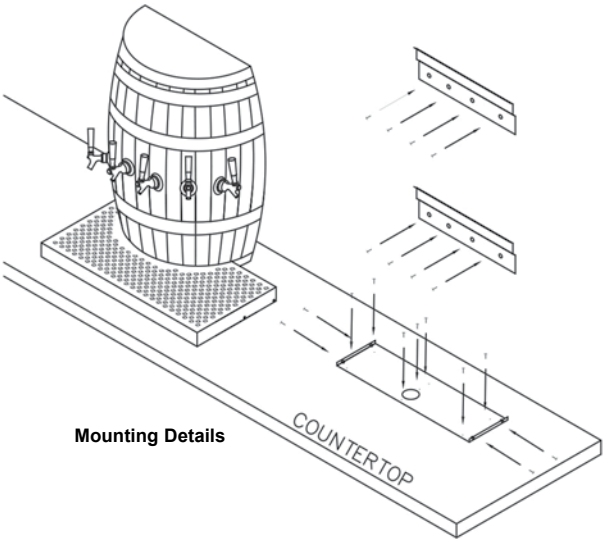

Mounting Details

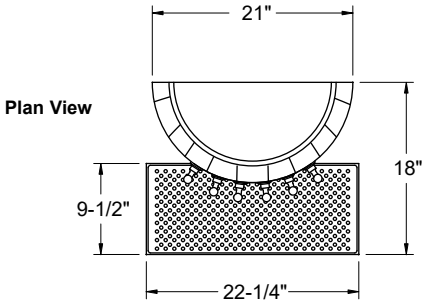

Plan View

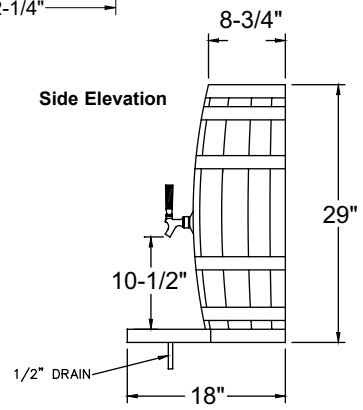

Side Elevation

Wood Barrel Towers with Drain Pan and 72″ Restriction Lines

Flat Black	List	Natural Wood	List	# of Faucets	Wgt
WB-3-B	$3,898	WB-3-N	$3,898	3	85#
WB-3-BR	$4,813	WB-3-NR	$4,813	3	85#
WB-4-B	$4,193	WB-4-N	$4,193	4	90#
WB-4-BR	$5,205	WB-4-NR	$5,205	4	90#
WB-5-B	$4,524	WB-5-N	$4,524	5	95#
WB-5-BR	$5,632	WB-5-NR	$5,632	5	95#
WB-6-B	$4,818	WB-6-N	$4,818	6	100#
WB-6-BR	$6,030	WB-6-NR	$6,030	6	100#

All faucets are certified low lead compliant

Product Information

(see WH, WH-S, WDH, & WH-ESD Spec Sheets for complete details)



WH-12



WHS-12



WH-14 with optional wrist handles



WHS-14

12″ Wide

Model	List	Wgt
WH-12*	$1,525	22#
WH-12-LF* (less faucet)	$1,038	20#

12″ Wide with Skirt

Model	List	Wgt
WHS-12*	$1,658	27#
WHS-12-LF* (less faucet)	$1,171	25#

14″ Wide

Model	List	Wgt
WH-14*	$1,429	22#
WH-14-LF* (less faucet)	$971	20#

14″ Wide with Skirt

Model	List	Wgt
WHS-14*	$1,542	27#
WHS-14-LF* (less faucet)	$1,084	25#

*NOTE: These items are manufactured to order and are not returnable

12″ with Integrated Side Splashes

Model	List	Wgt
WH-12-S*	$1,783	27#
WH-12-S-LF* (less faucet)	$1,296	25#

12″ with Integrated Side Splashes & Skirt

Model	List	Wgt
WHS-12-S*	$2,076	33#
WHS-12-S-LF* (less faucet)	$1,589	31#



WH-14-S



WHS-14-S

14″ with Integrated Side Splashes

Model	List	Wgt
WH-14-S	$1,708	27#
WH-14-S-LF (less faucet)	$1,250	25#

14″ with Integrated Side Splashes & Skirt

Model	List	Wgt
WHS-14-S	$2,016	33#
WHS-14-S-LF (less faucet)	$1,558	31#

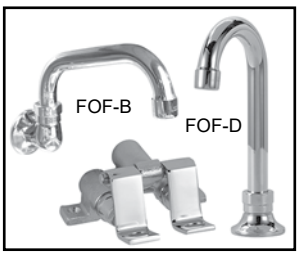

Optional foot-operated faucets

FOF-B
- WH-12
- WHS-12
- WH-12-S
- WHS-12-S

FOF-D
- WH-14
- WHS-14
- WH-14-S
- WHS-14-S
- WDH-14
- WH-14-ESD

⚠WARNING: The plastic wet waste strainer included with this product can expose you to chemicals including Bisphenol A (BPA), which is known to the State of California to cause birth defects or other reproductive harm. For more information, go to www.P65Warnings.ca.gov.
Warning applies to State of California only. Part #03000483



WDH-14

14″ Wide with Soap & Paper Towel Dispensers

Model	List	Wgt
WDH-14	$2,173	37#
WDH-14-LF (less faucet)	$1,715	35#



WH-14-ESD

14″ Extended Splash w/ Soap & Towel Dispenser

Model	List	Wgt
WH-14-ESD*	$1,882	37#
WH-14-ESD-LF* (less faucet)	$1,424	35#

Configurable Options

Model	Description	List	Wgt
LS15	15″ deep left side splash	$197	1#
RS15	15″ deep right side splash	$197	1#
FOF-B	Convert to foot-operated backsplash faucet for WH-12, WH-12, WH-12-S, and WHS-12-S models	$725	3#
FOF-D	Convert to foot-operated deck faucet for WH-14, WHS-14, WH-14-S, WHS-14-S, WDH-14 and WH-14-ESD models	$553	3#

Accessories

Model	Description	List	Wgt
03000512	P-trap, 17 ga. chrome plated steel	$111	2#
03000511	Wrist handles (set of two)	$61	2#
03000483	Wet waste sink strainer	$73	1#
TD-C	Paper towel dispenser, C-fold	$352	5#

All faucets are certified low lead compliant



DI-HS12



DI-HS14

Drop-In Hand Sinks

Model	List	Length	Depth	Wgt	Faucet
DI-HS12	$1,075	12″	17″	18#	Yes
DI-HS12-LF	$617	12″	17″	15#	No
DI-HS14	$1,075	14″	15″	18#	Yes
DI-HS14-LF	$617	14″	15″	15#	No

Product Information

(see DI-HS, DI-I, and DI-IB Spec Sheets for complete details)

Standard Features: All stainless steel construction • Includes four 1/4-20 x 1-1/2″ studs for mounting to countertop • DI-IB24 and DI-IB30 feature special angle brackets, U-channels, and mounting bolts for easy installation)

Sink Features: 9-1/4″ by 11-1/2″ by 6″ deep sink bowl • Includes 1-1/2″ IPS drain fitting

Ice Bin Features: PVC plastic breaker strip around ice bin liner: creates 5/16″ raised edge around liner (NSF® requirement is 3/16″), acts as thermal barrier to prevent heat transfer, and makes the cover slide easier • Sliding stainless steel cover • Foamed-in-place insulation • Galvanized steel exterior wrap • 24″ and 30″ models available with 10 circuit cold plate • Models without cold plates have a 1-1/2″ welded tailpiece - no drain fitting to break or come loose • 10-1/2″ deep liner • Manufactured with total welded construction to meet all NSF® standards

⚠WARNING: The plastic wet waste strainer included with this product can expose you to chemicals including Bisphenol A (BPA), which is known to the State of California to cause birth defects or other reproductive harm. For more information, go to www.P65Warnings.ca.gov.
Warning applies to State of California only. Part #03000483



DI-IS24



DI-IW24

Drop-In Ice and Sink Units

Model	List	L	D	Wgt	Faucet
DI-IS24	$2,716	24″	19″	55#	Yes
DI-IS24-LF	$2,349	24″	19″	52#	No

Drop-In Ice and Water Station Units

Model	List	L	D	Wgt	Faucet
DI-IW24	$2,964	24″	19″	55#	Yes
DI-IW24-LF	$2,482	24″	19″	52#	No



DI-IB24-CP10



DI-IB18

Accessories

Model	Description	List	Wgt
03000512	P-trap, 17 ga. chrome plated steel	$111	2#
03000511	Wrist handles (set of two)	$61	2#
03000483	Wet waste sink strainer	$73	1#

Drop-In Ice Bins

Model	List	Length	Depth	Cold Plate	Wgt	Ice Capacity
DI-IB12	$1,965	14″	19″	No	50#	33#
DI-IB18	$2,198	20″	19″	No	60#	50#
DI-IB24	$2,529	26″	19″	No	70#	71#
DI-IB30	$2,796	32″	19″	No	80#	89#
DI-IB24-CP10	$4,766	26″	19″	Yes	140#	71#
DI-IB30-CP10	$5,044	32″	19″	Yes	150#	89#

Counter Cut-Out Dimensions
DI-IB12 = 17-1/2″ by 12-1/2″
DI-IB18 = 17-1/2″ by 18-1/2″
DI-IB24 = 17-1/2″ by 24-1/2″
DI-IB30 = 17-1/2″ by 30-1/2″
All other models, reference spec sheet



Product Information

(see LC Spec Sheet for complete details)

Standard Features:

- Self-contained forced air refrigeration system for uniform cooling of product
- Automatic condensate evaporator
- Digital thermostat with automatic defrost
- All stainless steel interior construction
- Stainless steel foamed-in-place insulated door and lettuce chute
- Stainless exterior construction with galvanized back and bottom
- Removable plastic lettuce bin and divider included
- Removable condenser air inlet filter for easy cleaning
- Bracket for wall mounting
- 4″ adjustable legs available
- Nine-foot grounded cord & plug provided
- Listed to NSF standard 7 for open food as a storage refrigerator

Capacity: Approx. 50 heads of lettuce (shredded)
Electrical: 120V, 1 phase, 60Hz, 2.5 full load amps. Dedicated 15 amp circuit is required.
Refrigeration: 1/8 HP, R290 refrigerant, 1,023 BTU/hr heat rejection
Plumbing: Automatic condensate evaporator. No drain connection required.

Lettuce Crisper

Model	Description	List	Wgt
LC	24″ Lettuce Crisper with plastic bin, stainless bin divider, & wall-mounting bracket	$7,372	185#

Accessories

Model	Description	List	Wgt
LC-BIN	Plastic lettuce bin (additional)	$418	15#
LC-BDIV	Lettuce bin divider, stainless steel (additional)	$133	5#
LCLS	4″ legs with adjustable flanged feet	$312	5#
CE-220/50S	Convert self-contained unit to 220V/50Hz electrical	$322	N/A



LC-BIN lettuce bin with LC-BDIV bin divider

Glastender

Glastender, Inc. • 5400 North Michigan Road • Saginaw, MI • 48604-9780
800.748.0423 • 989.752.4275 • Fax 989.752.4444 • www.glastender.com



CM24XS-RR

*NOTE: Countertop Merchandisers are manufactured to order and are not returnable

Product Information

(see CM Spec Sheet for complete details)

Standard Features: Self-contained forced air refrigeration system for uniform cooling of product • Automatic condensate evaporator • Digital thermostat with automatic defrost • All stainless steel interior construction • Stainless steel exterior construction with galvanized steel bottom • Removable condenser air inlet filter for easy cleaning • Nine-foot grounded cord & plug provided • Available with stainless steel door or glass door with stainless steel frame • Two adjustable coated shelves • Interior LED light included • Listed to NSF standard 7 for open food as a storage refrigerator
Capacity: 4.7 cu. ft.
Electrical: 120V, 1 phase, 60Hz, 2.5 full load amps. Dedicated 15 amp circuit is required
Refrigeration: 1/8 HP, R290 refrigerant
Plumbing: Automatic condensate evaporator. No drain connection required.

Countertop Merchandiser

Standard List = $7,910
Weight = 190#

CM24 ___ - ___ ___

Door Style:
- SS = Stainless Front and Back Door
- SX = Stainless Front and Glass Back Door - Add $588
- XS = Glass Front and Stainless Back Door - Add $588
- XX = Glass Front and Glass Back Door - Add $1,176

Front Door Hinge Location: L = Left or R = Right

Rear Door Hinge Location: L = Left or R = Right

Accessories

Model	Description	List	Wgt
LCLS	4″ legs with adjustable flanged feet	$312	5#
CE-220/50S	Convert self-contained unit to 220V/50Hz electrical	$322	N/A



WMR24S-R

Product Information

(see WMR Spec Sheet for complete details)

Standard Features: Self-contained forced air refrigeration system for uniform cooling of product • Automatic condensate evaporator • Digital thermostat with automatic defrost • All stainless steel interior construction • Stainless exterior construction with galvanized back and bottom • Available with stainless steel door or glass door with stainless steel frame • Two adjustable coated shelves • Removable condenser air inlet filter for easy cleaning • Bracket for wall mounting • Nine-foot grounded cord & plug provided • Interior LED light included • Listed to NSF standard 7 for open food as a storage refrigerator

Capacity: 3.9 cu. ft.
Electrical: 120V, 1 phase, 60Hz, 2.5 full load amps. Dedicated 15 amp circuit is required.
Refrigeration: 1/8 HP, R290 refrigerant
Plumbing: Automatic condensate evaporator. No drain connection required.

Wall-Mount Refrigerators

Model	List	Door Styles	Hinge	Wgt
WMR24S-L	$6,863	Stainless	Left	165#
WMR24S-R	$6,863	Stainless	Right	165#
WMR24X-L	$7,455	Glass	Left	165#
WMR24X-R	$7,455	Glass	Right	165#

Accessories

Model	Description	List	Wgt
LCLS	4″ legs with adjustable flanged feet	$312	5#
CE-220/50S	Convert self-contained unit to 220V/50Hz electrical	$322	N/A

All faucets are certified low lead compliant

Product Information

(see DI-FR Spec Sheet for complete details)

Standard Features: Stainless steel work surface, interior liner, and lid with galvanized steel exterior wrap • Foamed-in-place insulation • Available with built-in seamless welded 6″ diameter draining dipper well and faucet • Eight-foot grounded cord and plug provided • Available sizes for one or two 3-gallon container capacity • Includes special angle brackets, U-channels, and mounting bolts for easy installation

Capacity:

- DI-FR models - one 3-gallon container of ice cream
- DI-FR36 models - two 3-gallon containers of ice cream

Electrical: 120V, 1 phase, 60 Hz, 3.5 full load amps. Dedicated 15 amp circuit is recommended. Includes 8-foot grounded cord and plug.

Refrigeration: Operating range -5°F to 10°F, 1/4 HP, 0.06 Ton, R290 100g (3.53 oz) refrigerant

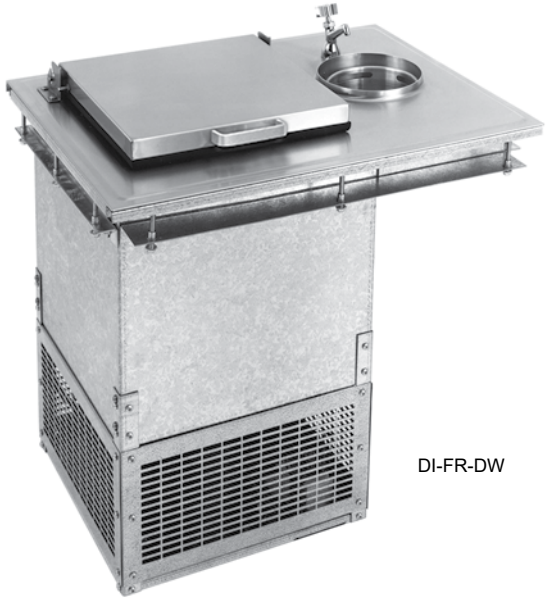

DI-FR-DW

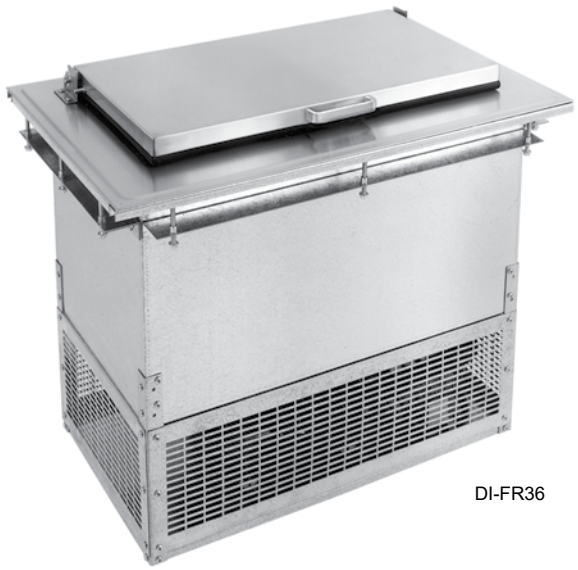

DI-FR36



DI-FR36-FL

Drop-In Ice Cream Freezers

Model	List	Dipper Well	Wgt
DI-FR	$4,686	No	115#
DI-FR-DW	$5,688	Yes	120#
DI-FR36	$5,692	No	135#
DI-FR36-DW*	$6,693	Yes	150#

Drop-In Ice Cream Freezers with Flip Lid

Model	List	Dipper Well	Wgt
DI-FR36-FL	$5,826	No	135#
DI-FR36-DW-FL*	$6,830	Yes	150#

*NOTE: These items are manufactured to order and are not returnable

Accessories

Model	Description	List
CE-220/50S	Convert self-contained unit to 220V/50Hz electrical	$322

Glastender

Glastender, Inc. • 5400 North Michigan Road • Saginaw, MI • 48604-9780
800.748.0423 • 989.752.4275 • Fax 989.752.4444 • www.glastender.com



MIB-36



MIB-36-H



MIB-36-ED

30″ High Mobile Ice Baths

Model	Length	List	Wgt
MIB-36	36″	$5,371	170#
MIB-48	48″	$5,986	205#

36″ High Mobile Ice Baths

Model	Length	List	Wgt
MIB-36-H	36″	$5,487	180#
MIB-48-H	48″	$6,261	215#

36″ High Extra Deep Mobile Ice Baths

Model	Length	List	Wgt
MIB-36-ED	36″	$5,841	200#
MIB-48-ED	48″	$6,520	235#

Mobile Ice Bin Accessories

Model	Description	List	Wgt
TR	Towel Ring	$26	1#
BO/CC-M	Bottle opener and cap catcher	$112	3#



TR

Standard mounting for towel rings is server side left. Standard mounting for bottle opener/cap catcher is server side right. Please specify when ordering if you would like these items mounted in a different location.

Product Information

(see MIB Spec Sheet for complete details)

Standard Features

- Designed for iced product storage and merchandising, especially long neck bottled beer
- Foamed-in-place insulated cabinet and PVC breaker strip around liner prevents exterior condensation
- Heavy duty construction with attractive black vinyl-clad exterior that resists scratching
- Stainless steel top, liner, and perforated drain pan inserts with 1/4″ radius interior corners for easy cleaning
- Built-in storage area below ice bin. Stainless steel floor has 1/4″ radius corners for easy cleaning.
- No plumbing required. Includes a flexible drain line with on/off valve for draining when most convenient.
- The standard models have a 30-3/8″ work height
- The '-H' models feature a taller cabinet base and a 36-38″ work height
- The '-ED' models feature an extra deep bath and a 36-3/8″ work height
- Standard and -H models liner depth 10-1/2″
- -ED model liner depth 16-1/2″
- All models available in lengths of 36″ or 48″
- Optional towel ring and bottle opener/cap catcher available
- Flexible drain line with on/off valve
- 4-1/8″ rubberized casters, with two locking casters on server side

*NOTE: Mobile Ice Baths are manufactured to order and are not returnable

† 36 = 36″, 48 = 48″

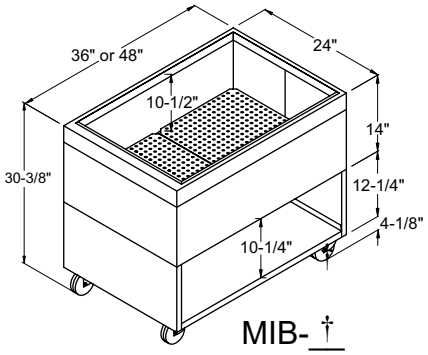

MIB-†

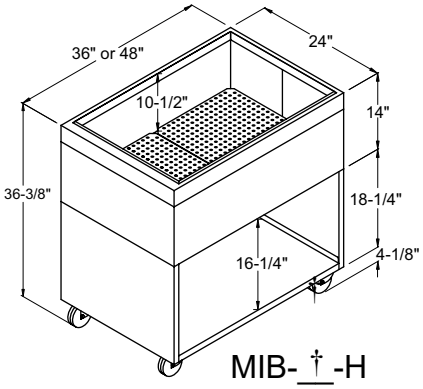

MIB-†-H

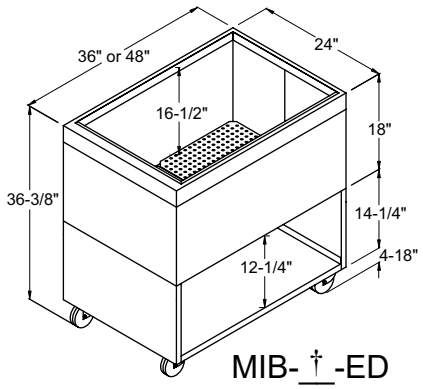

MIB-†-ED

Kitchen Fabrication & Refrigeration



The IB-14x22 as a food pan holder (pan not included)



The IB-14x22 as a portable ice display unit

*NOTE: The IB-14x22 is manufactured to order and is not returnable

Product Information

(see IB-14x22 Spec Sheet for complete details)

Standard Features

The IB-14x22 is an all stainless steel, foam-in-place insulated, portable ice bin that sits on a countertop • The exterior dimensions are 14″ by 22″ by 10″ high and the interior liner opening is sized to hold one food pan • The IB-14x22 also works well as a countertop ice display unit and does not need to be used with a steam table pan • Since the IB-14x22 is portable, it does not have a drain

Ice Pan Holder*

Model	List	Weight
IB-14x22	$1,894	35#



IBM-18x30 with undershelf



IBM-18x30 with enclosed base

*NOTE: Mobile Ice Bins are manufactured to order and are not returnable

Product Information

(see IBM Spec Sheet for complete details)

Standard Features

The IBM-18x30 is an all stainless steel, foam-in-place insulated, mobile ice bin that is 18″ by 30″ by 30″ high • The interior liner is 10-1/2″ deep • A drain valve is provided for draining melted ice water • The IBM-18x30 works well as an ice bath for bottled beer or wine • Available with undershelf or enclosed base

Mobile Ice Bin*

Model	List	Weight
IBM-18x30	$3,905	100#

Configurable Options

Undershelf	No charge
Enclosed base	$262

Wall Cabinets*

Pricing effective January 1, 2027



WCH48



WCH36

Wall Cabinets

Open Front	List	Hinged Doors	List	Length	Wgt
WCO24	$2,141	WCH24	$3,449	24″	100#
WCO30	$2,292	WCH30	$3,678	30″	120#
WCO36	$2,411	WCH36	$3,891	36″	140#
WCO42	$2,531	WCH42	$4,094	42″	160#
WCO48	$2,651	WCH48	$4,298	48″	180#
WCO60	$4,583	WCH60	$7,356	60″	220#
WCO72	$4,824	WCH72	$7,779	72″	250#
WCO96	$5,303	WCH96	$8,597	96″	310#

Product Information

(see WC Spec Sheet for complete details)

Standard Features: Includes intermediate shelf • Includes wall-mounting bracket • Available with open front or with hinged doors • Door models include door locks and positive latch catch • Door models 24″ - 48″ have 2 doors, 60″ - 96″ have 4 doors • Sloping top creates sanitary surface • Four door models ship as two units and include hardware for field assembly

*NOTE: Wall Cabinets are manufactured to order and are not returnable

Index

A

Add-on cabinet bases 32
All-in-one stations 45-46

B

Back bar
- Coolers ..... (see Coolers)
- Dry storage 129-130
- Glass storage 131
- Liquor display 131

Backsplash, glasswasher 3
Bar die, modular 48, 80
Bar, Portable 13-14
Bar Profile Coolers ..... (see Coolers)
Beer / Beverage
- Accessories for cooler 92
- Cooler ..... (see Coolers)
- Drainer, underbar 47, 77
- Line chiller 133-134
- Towers 135-143, 145-156

Blender stations
- Bolt-on blender shelves 24, 65
- Drainboard 23
- Fillerboard 66
- Island Oasis® stand 42, 77
- Rinser faucet 23
- Sink 23, 50, 65
- Sink and rinser faucet 23

Bolt-on blender shelves 24, 65
Bottle
- Coolers ..... (see Coolers)
- Opener and Cap Catcher 123, 162
- Racks 21, 60
- Wells 21, 60

Bottle Disintegration System 1-2

C

Cabinets
- Add-on base 32
- Back bar, dry storage 129-130
- Drainboard 30-31, 71
- Dry waste 56
- POS 32, 54, 76
- Underbar 30-32, 71, 73
- Wall 163

Cap Catcher and Bottle Opener 123, 162
Casino Style Combo Ice Bin 18
CHOICE by Glastender Underbar 59-80
Clip-on
- Chemical rail (glasswasher) 6
- Dry waste (cocktail station) 12
- Dry waste rail 43, 78
- Garnish dispenser (cocktail station) 12
- Shelf divider 81, 83, 85, 87, 89, 97, 99, 101, 107, 109, 111, 113
- Speed rails 22

Cocktail Prep Cooler ..... (see Coolers)
Cocktail Prep Station 53
Cocktail stations ..... (see All-in-one stations and Pass-thru cocktail stations)
Combo Ice Bins 17, 61
Compartment Sinks 35, 75
Condensing unit storage cabinet 132
Countertop Merchandiser 160
Cooler miscellaneous 132
Coolers 81-91, 93-124
- Bar profile 81-91, 93-96, 107-110, 115-116, 119-120
- Cocktail prep 106
- Countertop merchandiser 160
- Draft beverage compatible 81-91
- Drawers 81-84, 87-90, 101-102, 115-116, 119-122
- Freezers reach-in 119-122
- Front serviced 81-84, 91, 93-94, 97-98, 107-108, 111-112, 115-118
- Frosters (chillers) Reach-in 115-118
- Frosters Slide top 124
- High Profile 103-105
- Keg 91
- Lettuce crisper 159
- Low profile 97-102, 111-114, 117-118, 121-122
- Mug froster, reach-in 115-122
- Mug froster, slide top 124
- One zone 81-82, 85-88, 93-104, 107-122
- Pass-thru 107-114
- Remote 85-86, 95-96, 99-100, 109-110, 113-114
- Shallow depth 93-96
- Side serviced 87-90, 101-102, 119-122
- Slide top 123
- Two zone 83-84, 89-90, 105
- Wall mount refrigerator 160
- Wine shelves, pull-out 81-90, 97-105

Corner drainboards 27-28, 51-52, 68-69
Countertop Merchandiser 160
Covers
- Back bar liquor display, locking 131
- Speed rails, locking 22, 79

Craft Ice, Mobile Freezer 44

D

Direct draw beverage towers and acc 92
Double speed rails 22, 79
Drain pans, drop-in 40
Drain pans, surface-mount 144
Draft beverage compatible coolers ..... (see Coolers)
Drainboards
- Blender stations 23
- Cabinets 30-31, 54, 71
- Corners 27-28, 51-52, 68-69
- Glassracks 29, 53, 54, 70
- Half cabinets 31
- Recessed 26, 66
- Underbar 25, 53, 54, 67

Drainers, beer 47, 77
Drawer inserts for fractional stainless pans 87, 101, 115, 119, 121
Drawers, cooler ..... (see Coolers)
Drink Rails 40
- Drop-in 38
- Mixology, drop-in 38

Drop-in
- Drain pans 40
- Drink rails 38
- Hand sinks 158
- Ice and sink units 158
- Ice and water stations 158
- Ice bins 158
- Ice cream freezers 161
- Mixology drink rails 38
- Mixology wells 38
- Rinser faucets 39

Dry storage cabinets 129-130
Dry waste
- Cabinet 56
- Chutes 34, 43, 78
- Clip-on, receptacle for pass-thru 12
- Rail 35, 43, 78
- Receptacle 43, 57, 73, 78

E

ELEVATION by Glastender 49-58, 106
Equipment Stands
- Blender stations 23-24, 50, 65
- Island Oasis 42, 77
- Margarita Machine 131
- POS cabinet 32, 54, 76

F

Fillerboards (see also Drainboards)
- Blender station 65
- Corner 69
- Drainboard cabinets ..... 30 (see note)-31
- Underbar ..... 25 (see note), 66

Four compartment sinks 35, 58, 75
Freezers
- Drop-in, ice cream 161
- Ice cream 44
- Mobile, craft ice 44
- Mobile, ice cream 4
- Reach-in ..... (see Coolers)

Front serviced coolers ..... (see Coolers)
Frosters (chillers) ..... (see Coolers)
Fusion Sink 34, 57
Fusion Tool Rinsing 50

G

Garnish dispenser
- Clip-on 12
- Stand alone 16, 17, 18, 60, 61, 62

Garnish drawer insert 81, 87, 101
Glass ice display units 125
Glass storage, back bar 131
Glassracks
- Drainboard 29, 53, 54, 70
- Holders (glasswasher) 6
- Racks 6
- Underbar, open 29, 53, 70

Glasswashers
- High Temp 4
- Rotary 3, 5-6

H

Half cabinets, drainboard 31
Hand sinks
- Drop-in 158
- Underbar 33-34, 57, 72
- Wall-mount 157

High Profile Coolers ..... (see Coolers)

I

Ice and sink units, drop-in 158
Ice and water stations, drop-in 158
Ice baths, mobile 162
Ice bins
- Casino Style Combo 18
- Combo 17, 61
- Dividers 12, 16, 17, 60, 61, 62
- Drop-in 158
- Extra deep 15, 17, 60, 61
- Ice and sink units 158
- Ice and water stations 158
- Mobile 163
- Pass thru 16, 62
- Specialty 163
- Tubing chase 16, 17, 45
- Underbar 15, 17, 18, 49, 59, 60, 61

Ice-chilled cocktail prep station 53
Ice cream freezer
- Drop-in 161
- Mobile 44
- Underbar 44

Ice display units 126
Ice pan holder 163
Island Oasis® stand 42, 77

J

Jockey box ..... (see Ice bins)

K

Keg coolers ..... (see Coolers)
Kitchen Fabrication & Refrigeration .. 157-163

L

Lettuce crisper.....159
Lighted liquor displays 127-128
Line chiller
- Beer 133-134
- Stands 134
- Wall racks 134

Liquor displays
- Back bar.....131
- Lighted..... 127-128

Liquor Steps.....41, 55, 76
Locking covers
- Back bar liquor display.....131
- Speed rail.....22, 79

Low profile coolers..... (see Coolers)
Low profile dry storage cabinets.....129

M

Margarita Machine Stand.....131
Mixology
- Bottle racks.....21
- Drink rails, drop-in 38
- Stations 37
- Units 36, 74
- Wells, drop-in 38

Mobile ice bath 162
Mobile ice bin 163
Mobile freezers 44
Modular bar die.....48, 80
Modular beverage stations 42
Mug frosters (chillers)..... (see Coolers)
Multiple bowl sinks.....35, 58, 75

O

One zone coolers..... (see Coolers)
Overshelves, cocktail stations.....12

P

POS cabinet stand 32, 54, 76
Paper towel dispenser, sink.....33, 34, ...57, 72, 157
Pass-thru cocktail stations..... 7-12
- Assembly 9-10
- Complete 11
- Disassembly.....10

Pass-thru coolers ..... (see Coolers)
Pass-thru ice bins 16, 62
Portable bars..... 13-14
Power pack, beer..... 133-134
Pull-Out Wine Shelves..... (see Coolers)

R

Reach-in mug froster..... 115-122
Recessed drainboards.....26, 66
Refrigerated Wine Drawers..... (see Coolers)
Register stand, underbar, POS 32, 54, 76
Regulators 92
Remote coolers..... (see Coolers)
Rinser faucet
- Blender station.....23
- Drop-in 39
- Mixology stations 37
- Mixology units 36, 74
- Undercounter mount.....39
- Stand alone 39

Rinser faucet extension (beer tower) . 135-143, ... 145-154
Rotary Wine Shelf.....81, 83, 107

S

Shallow depth coolers..... (see Coolers)
Shelf divider, clip-on.....81, 83, 85, 87, 89, ...97, 99, 101, 107, 109, 111, 113
Shelf retention rail.....81, 83, 85, 87, 101
Shelves
- Pull-Out..... See Pull-Out Wine Shelves

Side serviced coolers.....(See Coolers)
Side splash .....24, 65, 66, 67, 70, 71, 72, 73, ...74, 75, 157
Single speed rails 22, 79
Sinks
- Blender station.....23, 50, 65
- Covers.....35, 75
- Cabinets 34, 73
- Compartment.....35, 58, 75
- Drop-in 158
- Fusion 34, 57
- Hand 33-34, 57, 72
- Single bowl..... 33-34, 72
- Towel ring.....34, 35, 65, 72, 73, 75
- Wall-mount 157
- Waste 57
- Wet waste.....33, 34, 72
- Wet waste strainer... 23, 33, 34, 35, 36, 65, ... 72, 73, 75, 157, 158

Slide top coolers..... (see Coolers)
Slide top mug frosters ..... (see Coolers)
Slim Jim trash receptacle 43, 78
Sneeze guard 12
Soap dispenser, liquid 34, 72
Soda gun holders.....19, 63
Soda gun holder, undercounter mount .20, 64
Soda manifold housings.....20, 64
Spec sheets.....specs.glastender.com
Specialty ice bins 163
Speed rails
- Clip-on.....22
- Double 22, 79
- Locking covers 22, 79
- Single.....22, 79

Stemware Rack 6
Surface-Mount Drain Pan 144

T

Three compartment sinks.....35, 58, 75
Tool Rinsing, Fusion.....50
Towel ring .....24, 34, 35, 45, 46, 65, ...72, 73, 75, 162
Towers, beer
- Black Forest.....146
- Braumeister 147
- Bridge 137
- Cobra 145
- Column 135
- Double-sided 138
- Mini Mushroom.....149
- Monaco.....148
- Mushroom 150
- Pipe Bridge 139
- Pipe Cantilever 140
- Pipe Pass-Thru.....141
- Pipe Tee 142
- Pipe Wall 143
- Rembrandt 152
- Rinse faucet extension . 135-143, 145-154
- Roman 151
- Tee 136
- Undercounter 155
- Vienna.....153
- Wall mount 155
- Wood barrel 156
- Zeus 154

Trash receptacle
- Gray plastic.....34, 43, 56, 57, 72, 73
- Slim Jim.....43, 56, 78
- Stainless steel 34, 43, 72, 73

Tubing chase
- Accessory, drainboard 25
- All-in-one 45
- Ice bin.....16, 17
- Underbar.....47, 64

Two compartment sinks 35, 58, 75
Two zone cooler..... (see Coolers)

U

Under cabinet (Add-on cabinet base) 32
Underbar - Choice by Glastender 59-80
Underbar compartment sinks 35, 58, 75
Underbar - Elevation by Glastender 49-58
Underbar ice cream freezer.....44
Undercounter mount soda gun holder..20, 64
Undercounter mount rinser faucet 39

W

Wall Cabinet.....163
Wall-Mount Hand Sinks.....157
Wall-Mount Refrigerators 160
Waste sink, Elevation.....57
Wet waste
- Sinks 33, 34, 72
- Strainer .....23, 33, 34, 36, 65, ... 72, 73, 74, 157, 158

Wine accessories for cooler 92
Wine rack shelves .....81, 83, 85, 87, 89, ...97, 99, 101, 107, 109, 111, 113
Wine storage
- Refrigerated drawers ..... (see Coolers)
- Wine shelves, pull-out..... (see Coolers)
- Rotary shelf 81, 83, 107

Work Center, Elevation.....49
Wrist Handles.....34, 72, 73, 157, 158

Glastender, Inc. • 5400 North Michigan Road • Saginaw, MI • 48604-9780
800.748.0423 • 989.752.4275 • Fax 989.752.4444 • www.glastender.com

APPLICABLE TO ALL PRODUCTS SOLD WITHIN THE UNITED STATES AND CANADA

Glastender, Inc. warrants all products to be free of defects in material and workmanship.

All Glasswashers and BDS models

One-year parts and labor warranty. Warranty is effective for one year from the date of installation or up to 18 months from date of factory shipment, whichever occurs sooner.

All Self-Contained Refrigeration Models

Two-year parts and labor warranty. Warranty is effective for two years from the date of installation or up to 30 months from date of factory shipment, whichever occurs sooner.

Authorization for labor must be obtained from Glastender within the warranty period and prior to the service being performed.

Labor warranty applies to the 50 states of the USA and Canada only.

Remote refrigeration models exclude the labor warranty for issues related to the field installation and test of the completed refrigeration system, provided by others.

Field replacement parts not covered under the original warranty include a 90-day part warranty from the date of installation.

EXTENDED PARTS & LABOR WARRANTY

Glastender's two-year parts and labor warranty on self-contained refrigeration models can be extended by one year with the purchase of an extended parts and labor warranty. Specify option number EWR3 ($365 net price) when ordering.

FIVE YEAR COMPRESSOR PART WARRANTY

Glastender warrants the compressor for all self-contained refrigeration models for five years, running concurrently with the parts and labor warranty. After the parts and labor warranty expires, only the compressor is covered; no labor is covered.

A completed warranty claim form MUST accompany all returned defective parts or assemblies. Upon request, a defective part or assembly must be returned to Glastender, Inc., Saginaw, Michigan, with all transportation and delivery charges prepaid. Warranty repairs or replacements will be shipped FOB factory in Saginaw, Michigan. Reimbursement for applicable freight charges covers ground service only.

Glastender provides in-warranty repairs during a service company's regular working days and hours. There is no provision for payment of a premium rate during "overtime" hours. When warranty service is requested during other than normal working hours, the end user will be charged the premium portion of the overtime rate.

The warranty covers substantiated travel expenses for up to 2 hours / 100 miles round trip up to a maximum of $225. Any additional costs due to installations that require extra work, time, or travel to gain access for service are the sole responsibility of the equipment purchaser. Any exceptions to these travel and access limitations must be pre-approved by a factory representative. The warranty does not cover door gaskets, chemical tubing, pump squeeze tubing, and/or any equipment subjected to accidents, freight damage, alterations from the original design, improper power and/or plumbing hookups, improper chemical use, general misuse, or lack of routine required maintenance as determined by Glastender, Inc. Installation, normal control adjustments, general maintenance, correcting an installation error, or service calls that reveal the unit is functioning normally will not be reimbursed under warranty.

Condenser coils on self-contained refrigeration products must be cleaned regularly. Failure to provide adequate air flow to a refrigeration unit will void the warranty.

Glastender shall not be liable for loss of use, revenue, or profit, or for any other indirect, incidental, special, or consequential damage including, but not limited to, product spoilage or loss.

This warranty is conditioned upon Glastender receiving notice of any defect subject to this warranty within sixty (60) days of its discovery by the end user or dealer. All products are warranted only for the initial place of installation. Removal of a product automatically terminates this warranty.

EXPORT WARRANTY - One year parts only.

EXCLUSION OF WARRANTIES

EXCEPT AS PROVIDED ABOVE, GLASTENDER MAKES NO WARRANTIES, EXPRESS OR IMPLIED, INCLUDING, BUT NOT LIMITED TO, ANY IMPLIED WARRANTY OF MERCHANTABILITY, FITNESS FOR A PARTICULAR PURPOSE OR NON-INFRINGEMENT.

LIMITATION OF REMEDIES AND DAMAGES

If Buyer makes a valid and timely claim as outlined above, Glastender's liability and Buyer's remedies under this agreement will be limited solely to labor charges authorized and/or replacement or credit, at Glastender's option, with respect to Products returned at Buyer's expense within thirty (30) days after warranty repair. GLASTENDER'S LIABILITY WILL IN NO EVENT BE GREATER IN AMOUNT THAN THE PURCHASE PRICE OF THE RETURNED PRODUCTS. GLASTENDER WILL NOT BE LIABLE UNDER ANY CIRCUMSTANCE FOR CONSEQUENTIAL OR INCIDENTAL DAMAGES, INCLUDING, BUT NOT LIMITED TO, LABOR COSTS EXCEPT AS COVERED UNDER OUR WARRANTY, LOST PROFITS OR THE LOSS OF PERISHABLE PRODUCTS RESULTING FROM THE USE OF OR INABILITY TO USE OUR PRODUCTS OR FROM OUR PRODUCTS' INCORPORATION INTO OR BECOMING A COMPONENT OF ANY OTHER PRODUCT. NEITHER PARTY WILL HAVE ANY NEGLIGENCE OR OTHER TORT LIABILITY TO THE OTHER, OR TO ANY THIRD PARTY, ARISING FROM ANY BREACH OF THIS AGREEMENT.

GOVERNING LAW - JURISDICTION

The terms and conditions of an order are to be governed and construed according to the laws of the State of Michigan, without regard to conflict of laws principles. Buyer hereby consents to the jurisdiction and venue of the courts located in Saginaw County, Michigan.

No representative, distributor, dealer, or any other person is authorized to modify this warranty. This warranty replaces all other written or verbal warranties.

NOTE: Glastender, Inc.'s policy of constant quality improvement means that prices, specifications, and policies are subject to change without notice. Questions regarding this warranty should be directed to Glastender's Warranty Administrator.

01-01-27

IMPORTANT!!

Attention Service Companies

Please review the important warranty information on this page. If you believe a service call should be covered by the factory, please call the factory for authorization between 8AM and 5PM EST, Monday through Friday.

Glastender®

Expect More. More Flexibility. More Features.



Do you have the Proper Pour Advantage?

Whether you're serving beer, coffee, wine, or cocktails on draft – expect more with Glastender's high-yield beverage dispensing systems. Scan the code to view more on our beverage dispensing solutions, including products, and spec sheets.

SCAN ME

info@glastender.com | 800.748.0423 | glastender.com